We reserve all rights in this document and in the information contained therein. Reproduction, use or disclosure to third parties without express authority is strictly forbidden. © Copyright ABB

The information in this document is subject to change without notice and should not be construed as a commitment by ABB. ABB assumes no responsibility for any errors that may appear in this document.

Except as may be expressly stated anywhere in this document, nothing herein shall be construed as any kind of guarantee or warranty by ABB for losses, damages to persons or property, fitness for a specific purpose or the like.

In no event shall ABB be liable for incidental or consequential damages arising from use of this document.

This document and parts thereof must not be reproduced or copied without ABB's written permission, and contents therof must not be imparted to a third party nor be used for any unauthorized purpose. Contravention will be prosecuted.

Additional copies of this document may be obtained from ABB at its then current charge.

© Copyright 2024 ABB ALL right reserved.

ABB

SE-721 68 Västerås
Sweden

We reserve all rights in this document and in the information contained therein. Reproduction, use or disclosure to third parties without express authority is strictly forbidden. © Copyright ABB

TABLE OF CONTENTS

PAGE	PAGE DESCRIPTION	Date	Edited by
1	TITLE PAGE	2018-09-25	SETHSTA
2	TABLE OF CONTENTS	2019-03-01	SETHSTA
3	TABLE OF CONTENTS	2019-03-01	SETHSTA
7	SYMBOL INFORMATION	2019-03-01	SETHSTA
7.1	REVISION INFOMATION	2019-03-01	SETHSTA
8	VIEW OF VOLTAGE MEARSUREMENT BOX	2019-03-01	SETHSTA
9	Device tag list sorts by Location name	2018-09-25	SETHSTA
11	POWER SUPPLY DSQC 661 AND 662 G1, G2, G3, F2, XT16	2018-09-25	SETHSTA
13	OPT:POWER SUPPLY DSQC609 XT31, G4, G5, G6	2018-09-25	SETHSTA
14	RUN CHAIN and PANEL BOARD A21 part one	2019-02-26	SETHSTA
15	RUN CHAIN and PANEL BOARD A21 part two	2018-09-25	SETHSTA
16	RUN CHAIN and PANEL BOARD A21 part three	2018-09-25	SETHSTA
16.1	FRONT VIEW OF SINGLE CABINET MDU HV	2018-09-25	SETHSTA
17	FRONT VIEW OF SINGLE CABINET MDU LV and HV	2018-09-25	SETHSTA
18	RUN CHAIN A21, EMERGENCY STOP, 2 and 3 MODE SELECTOR	2018-09-25	SETHSTA
19	VIEW OF DRIVE MODULE CABINET	2018-09-25	SETHSTA
20	RUN CHAIN A21, EXTERNAL EMERGENCY STOP, EXTERNAL 2 AND 3 MODE SELECTOR	2018-09-25	SETHSTA
21	FPU, FLEXPENDANT and option HOT PLUG	2019-02-26	SETHSTA
21.1	FPU, FLEXPENDANT and Opt. HOLD TO RUN DEVICE T10 JOGGING DEVICE	2018-09-25	SETHSTA
22	PANEL BOARD A21 Opt:EXT.CUSTOMER. CONNECT. SYSTEM SIGNALS	2018-09-25	SETHSTA
23	CONTACT AT THE CABINET WALL	2019-03-01	SETHSTA
24	MAIN COMPUTER A31 DSQC1000/DSQC1018	2018-09-25	SETHSTA
24.1	VIEW OF CONTACTOR & AXIS COMPUTER UNIT	2018-09-25	SETHSTA
25	RUN CHAIN and PANEL BOARD block diagram A21	2018-09-25	SETHSTA
29	MAIN COMPUTER A31 DSQC1000/DSQC1018 ; A32 DSQC1003	2018-09-25	SETHSTA
32	DEVICENET A31.2 M/S DSQC1006	2018-09-25	SETHSTA
33	DEVICENET ADAPTER	2018-09-25	SETHSTA
34	Main Computer/AnybusCC/RS232 Exp./Interface Board/	2018-09-25	SETHSTA
35	ETHERNET SWITCH A34, option MULTI MOVE 604-1/2	2018-09-25	SETHSTA
36	I/O ADAPTER HARNESS	2019-03-01	SETHSTA
37	Local I/O Digital Base 16in/16out	2018-09-25	SETHSTA
39	Local I/O Digital 8in/8out 8 Relay in/out	2018-09-25	SETHSTA
42	ANALOGUE I/O UNIT DSQC1032	2018-09-25	SETHSTA

TABLE OF CONTENTS

PAGE	PAGE DESCRIPTION	Date	Edited by
47	XS13	2019-03-01	SETHSTA
48	XS13Z	2019-03-01	SETHSTA

We reserve all rights in this document and in the information contained therein. Reproduction, use or disclosure to third parties without express authority is strictly forbidden. © Copyright ABB

We reserve all rights in this document and in the information contained therein. Reproduction, use or disclosure to third parties without express authority is strictly forbidden. © Copyright ABB

Stomme, ramverk/
Functional equipotential bonding

Stomme, ramverk/
Functional equipotential bonding

Jord, allmän symbol/
Earth , general symbol.

Störningsfri jord/
Functional earthing.

Skyddsjord/
Protective earthing.

Tvinnade ledare/
Twisted conductors.

Trippel tvinnade ledare/
Triple twisted conductors.

Fyrdubbelt tvinnade ledare/
Quadruple twisted conductors.

Part A
Part B

Tvinnade ledare part A med part B
Twisted conductors part A with part B

Skärm/
Shield.

Slutkontakt/
Make contact, general.

Handmanövrerad brytare, allmän/
Switch manually operated, general.

Styrning med spak/
Actuator (operated by lever).

Styrning genom vridning/
Actuator(operated by turning).

Styrning genom tryckning/
Actuator(operated by pushing).

Nödstopp (svamptryckknapp)/
Actuator, emergency.

Skarvhylsa
Through joint

Filter/
Filter.

Lampa/
Lamp.

Kontakthylsa hona/
Socket outlet female.

Kontaktstift hane/
Pin male.

Strömtransformator/
Current transformer.

Likström, DC /
Direct current, DC.

Växelström, AC /
Alternating current, AC.

Styrning, elektromagnetisk styrdon/
Actuator, by electromagnetic.

Ethernet signal:
1. Transmit TX+ or TX- and receive RX+ or RX-
2. Unit possible to transmit or recieve TX+/RX+ or TX-/RX-
3. Ethernet Gigabit signal, transmit pair one MX1+ , MX1- and receive the MX2+ , MX2-
If Gigabit transmit pair MX3+ , MX3- and receive pair MX4+ , MX4-

Column coordinate number on the drawing

Wire/connector one colour code.
BK = Black, BN = Brown, RD = Red, OG = Orange
YE = Yellow, GN = Green, BU = Blue, VT = Violet
GY = Grey, WH = White, PK = Pink, TQ = Turquoise

Wire/connector two colour code.

Example 1 : WH/RD = White and Red.
Example 2 : GNYE = Green and Yellow.

Example: Cable with four colour coded wire, square area AWG24 and cable number 709.

709 AWG24	BK
	BN
	RD/OG
	BK/OG

Translation table square area from AWG to mm2.

AWG28	0,093	AWG18	0,93
AWG26	0,15	AWG16	1,25
AWG24	0,25	AWG14	2,44
AWG22	0,34	AWG12	3,02
AWG20	0,56	AWG10	4,65

Run chain presentation starts at sheet 26.
The Run chain marked as a wider wire.

Example: Run chain marked with a wider wire.

Example: Not Run chain marked with a thin wire.

Harnesses:
EUROMP 67 SCC: 3HAC025841-005
EUROMAP 67 SCC: 3HAC026692-001
EUROMAP 67 I/O adapter: 3HAC063906-001
EUROMAP 67 JUMPER PLUGG : 3HAC025837-001
EUROMAP 67 Floor harness: 3hac024328-001

We reserve all rights in this document and in the information contained therein. Reproduction, use or disclosure to third parties without express authority is strictly forbidden. © Copyright ABB

Difference between 2018.09 Rel.18.2 3HAC024120-005 and 3HAC024120-004.

The total circuit drawing are upgraded and adapted to IRC5 rel.15.1-18.2 Design 14.
Differences between the old and the new circuit drawing.

Sh.9 is removed. Opt.pos switch is not available in IRC5 rel.15.1 Design14.
Sh.14 RCH2 have changed direction from + to -.
Sh.14.1 RCH2 have changed direction from + to -.

Sh.15 TEXT: Drive module1 A43.X1 exchange with Contactor board A43.X1 coordinate column 8.
Sh.16.1 new sheet
Sh.24 New computer DSQC1018 added.

Sh.29 New computer DSQC1018 added.

Sh.36 Adapter harness for EMP67 add.
Sh.36.5 Adapter harness for EMP12 add.

Sh.37 new sheet Local I/O Digital base
Sh.39 new sheet Local Digital and Relay I/O
Sh.42 new sheet Local I/O Analogue unit

Sh.44 is removed. Opt.422-1 Interbus-s Slave is not available in IRC5 rel.15.1 Design14.
Sh.45 is removed. Opt.420-1 Profibus DP Slave is not available in IRC5 rel.15.1 Design14.
Sh.47 XT8:1 and XT8:3 is removed, opt.pos.switch is not available in IRC5 rel.15.1 Design14.//18.2 XS13.2 added.

Sh.49 XT8:1 and XT8:3 is removed, opt.pos.switch is not available in IRC5 rel.15.1 Design14.
Sh.51 and sh.52 was removed, option for 2 IMM not possible to order.

References to options who have been removed and presented in other circut drawings or releases.
-If the option have been expired.
-If the option delivered as spare part only.
-If it's only a customized option.

Following Options refer to 3HAC024120-004 rev.03 : Option: FOR 2 IMM Sh. 51-52.

Following Options refer to 3HAC024120-005 rev.00 : Option: Euromap 12

Following Options refer to 3HAC024120-005 rev.00 : Option: Main coputer/AnybusCC/RS232
Remote I/O unit DSQC350A; Encoder unit DSQC377

20190301 Release 19.A 3HAC024120-005 rev01 (Euromap 12 removed. ref to 3HAC024120-005 rev00)

Sh.7 EUROMAP 12 I/O adapter 3HAC063989-001 and 3HAC024226-001 was removed.//
Harness EUROMP 67 SCC: 3HAC025841-005 added.
Floor Cable harness 3HAC024120-004 rev03 added

Sh.8 Interface to convertor box removed.

Sh.13 Interruption signals removed.// Text: IF DSQC and If not DSQC added.// interruption point XT31:1,:2, :6 added.// 24VDC:IMM removed coordinate 2.

Sh.14 EMP12 signal removed.

Sh.36 24VDC:IMM coordinate 2 removed.

Sh.37 +24V PWR and 0V GND exhanged with +24V_INT1 and +24V_INT2 .

Sh.47 wire 1008 signal change direction 24V_DC:IMM

Sh.48 XT31:2 was connected and XT31:1 added// XT31:4 was exchanges with XT31:5 and :6//

2024-03-24 Release 24.B. Rev 02.

Sh 34, connections updated to XS13.

We reserve all rights in this document and in the information contained therein. Reproduction, use or disclosure to third parties without express authority is strictly forbidden. © Copyright ABB

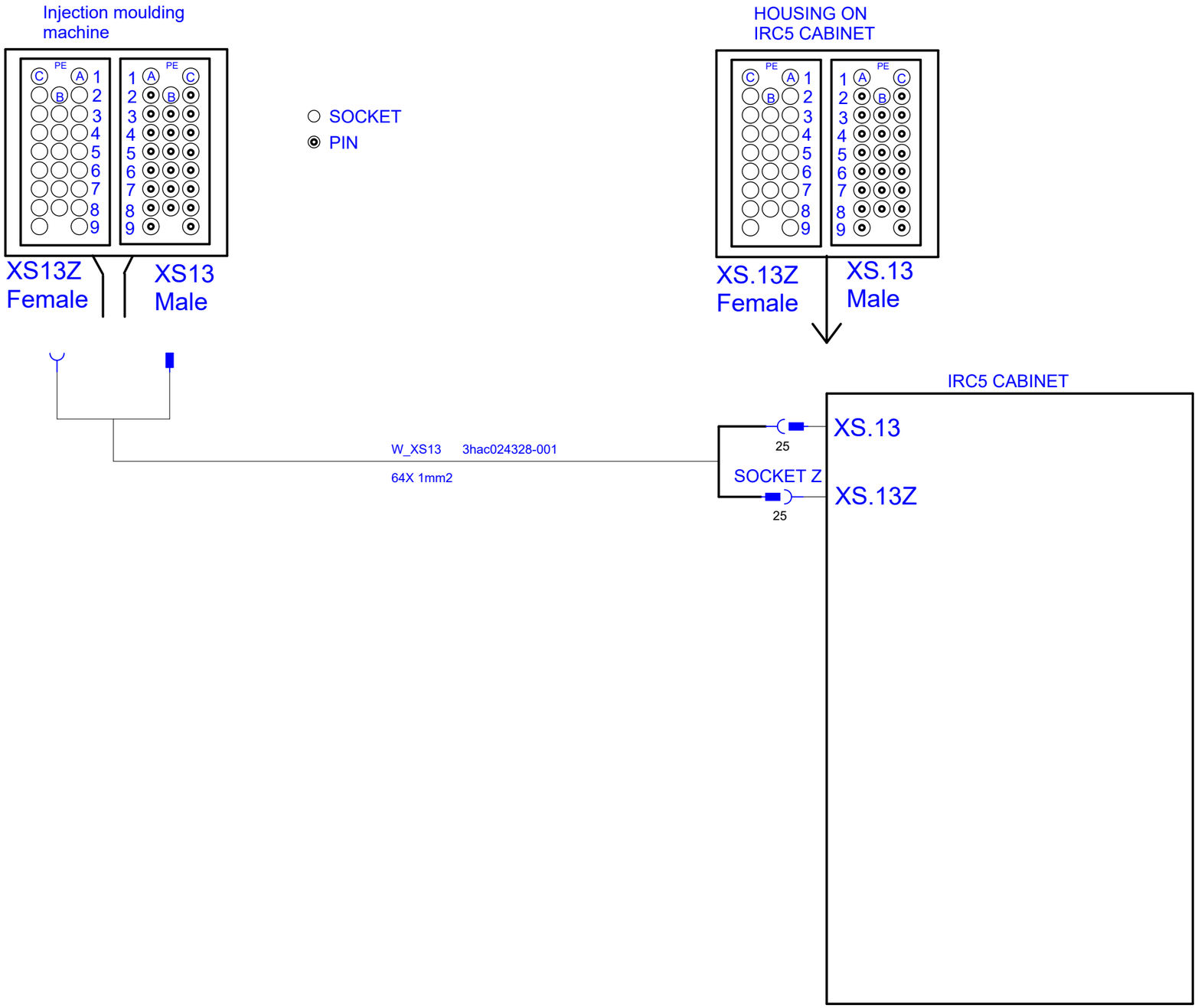

Latest revision:	EUROMAP 67	ABB	Lab/Office: RA/RDP	IRC5 DESIGN 14 Euromap 67 Interface IRC5 and Injection moulding machine	Status: Approved	Plant: = Location: + Sublocation: +
Prepared by, date: A.Hägglund	Approved by, date: S.Hällgren 2024-03-25				Document no. 3HAC024120-005	Rev. Ind 02
						Page 8 Next 9 Total 35

Location name	Function name	Page	Location name	Function name	Page
-.24K1	Contactor	47			
-.24K2	Contactor	47			
-A21	PANEL BOARD Sh 1 of 3	14			
-A21	PANEL BOARD	16			
-A21	EXT.CONTROL PANEL	20			
-A21	PANEL BOARD	22			
-A21-233	ES panel 2:A	20			
-A21-237	ES panel 1:A	20			
-A21-S21	2-MODE SELECTOR	20			
-A21-S21.1	3-MODE SELECTOR	20			
-A21-S21.2	MOTOR ON PB	20			
-A21-S21.3	EMERGENCY PB	20			
-A23	OPTION:STATUS LED ON FRONT	16			
-A31	MAIN COMPUTER	24			
-A31	Main computer	29			
-A31.2	DeviceNet M/S DSQC1006	32			
-A32	OPTION: 232/ Expansion board SERIE DSQC1003	29			
-A34	ETHERNET SWITCH A34 opt. MULTI MOVE 604-1/2	35			
-ETH_FPU	FLEXPENDANT	21.1			
-F2	AUTOMATIC FUSE	11			
-G1	POWER SUPPLY DSQC661	11			
-G2	POWER DISTRIBUTION BOARD DSQC662	11			
-G3	ENERGY BANK	11			
-G6	DEVICENET POWER SUPPLY	13			
-I/Ox	Digital I/O Base module	37			
-I/Ox	Relay I/O Add on module	39			
-S21	2-MODE SELECTOR	18			
-S21.1	3-MODE SELECTOR	18			
-S21.2	MOTOR ON PB	18			
-S21.3	EMERGENCY PB	18			
-XS13.2	(XP13.2)	47			

We reserve all rights in this document and in the information contained therein.Reproduction, use or disclosure to third parties without express authority is strictly forbidden. © Copyright 2017 ABB

We reserve all rights in this document and in the information contained therein. Reproduction, use or disclosure to third parties without express authority is strictly forbidden. © Copyright ABB

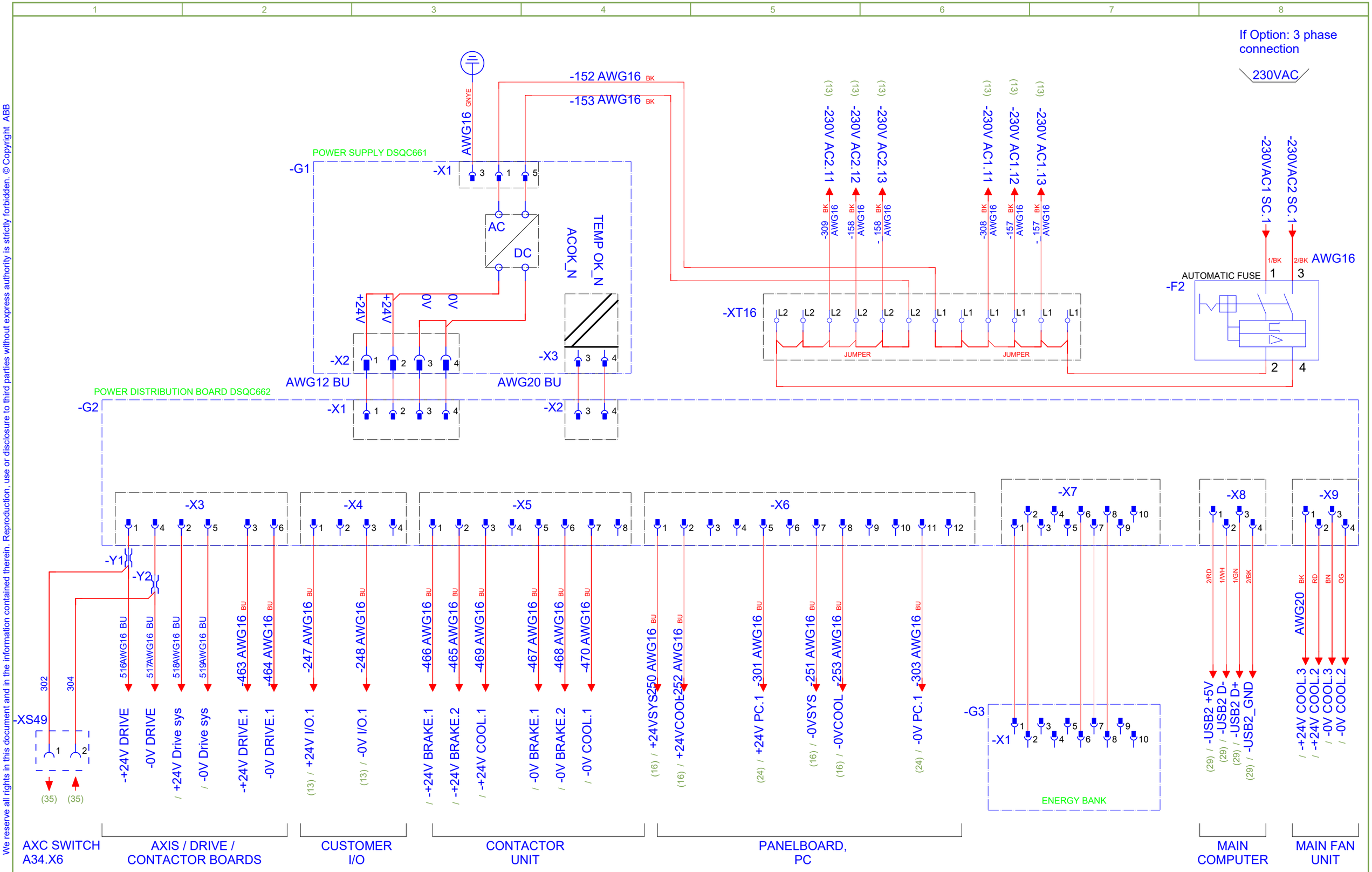

Latest revision:	EUROMAP 67	ABB	Lab/Office: RA/RDP	IRC5 DESIGN 14 Euromap 67 POWER SUPPLY DSQC 661 AND 662 G1, G2, G3, F2, XT16	Status: Approved Plant: = Location: + Sublocation: +
Prepared by, date: A.Hägglund	Approved by, date: S.Hällgren 2024-03-25				Document no. 3HAC024120-005 Rev. Ind 02 Page 11 Next 13 Total 35

We reserve all rights in this document and in the information contained therein. Reproduction, use or disclosure to third parties without express authority is strictly forbidden. © Copyright ABB

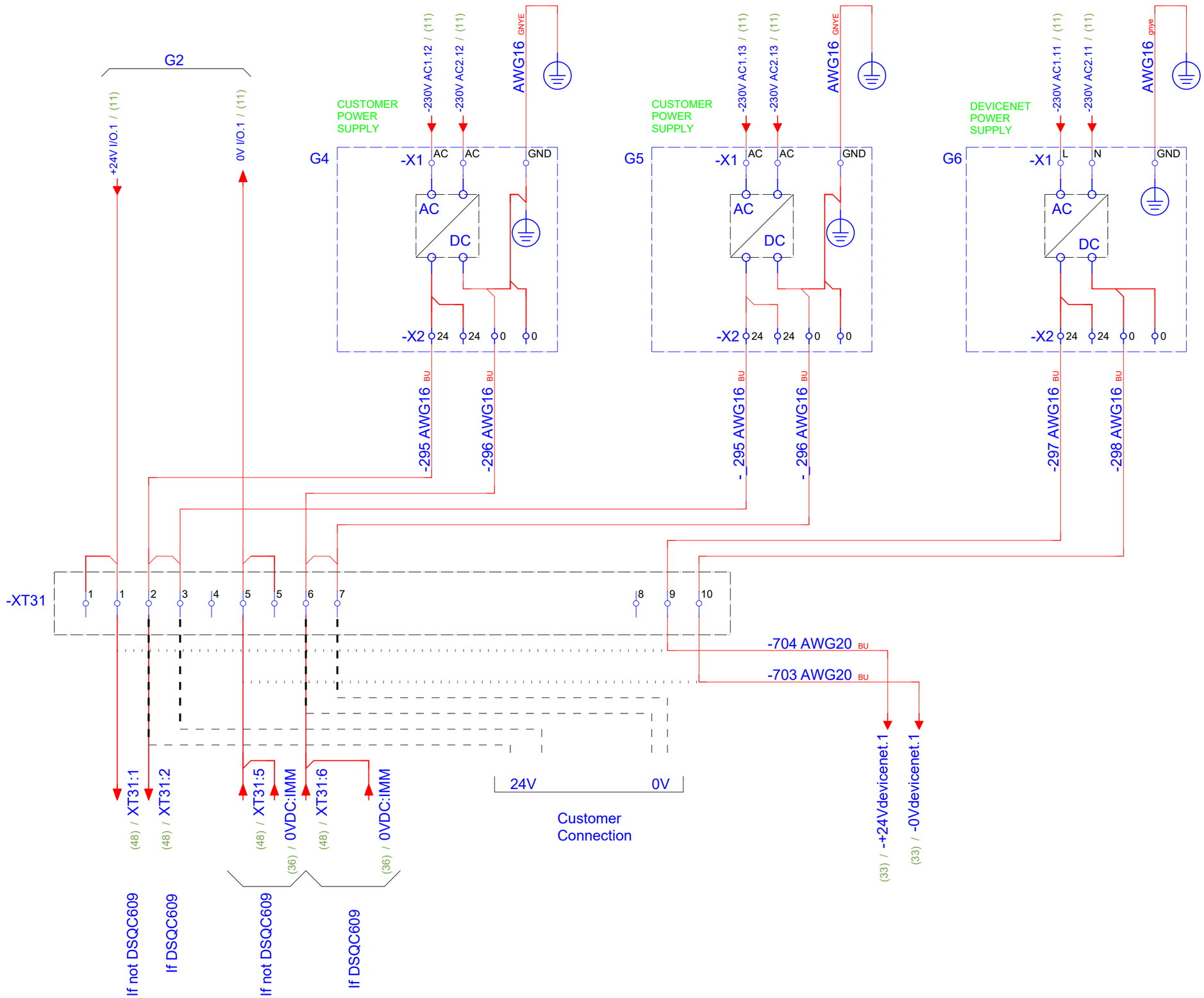

Latest revision:	EUROMAP 67	ABB	Lab/Office: RA/RDP	IRC5 DESIGN 14 Euromap 67 OPT:POWER SUPPLY DSQC609 XT31, G4, G5, G6	Status: Approved	Plant: = Location: + Sublocation: +
Prepared by, date: A.Hägglund	Approved by, date: S.Hällgren 2024-03-25				Document no. 3HAC024120-005	Rev. Ind 02

Page 13
Next 14
Total 35

We reserve all rights in this document and in the information contained therein. Reproduction, use or disclosure to third parties without express authority is strictly forbidden. © Copyright ABB

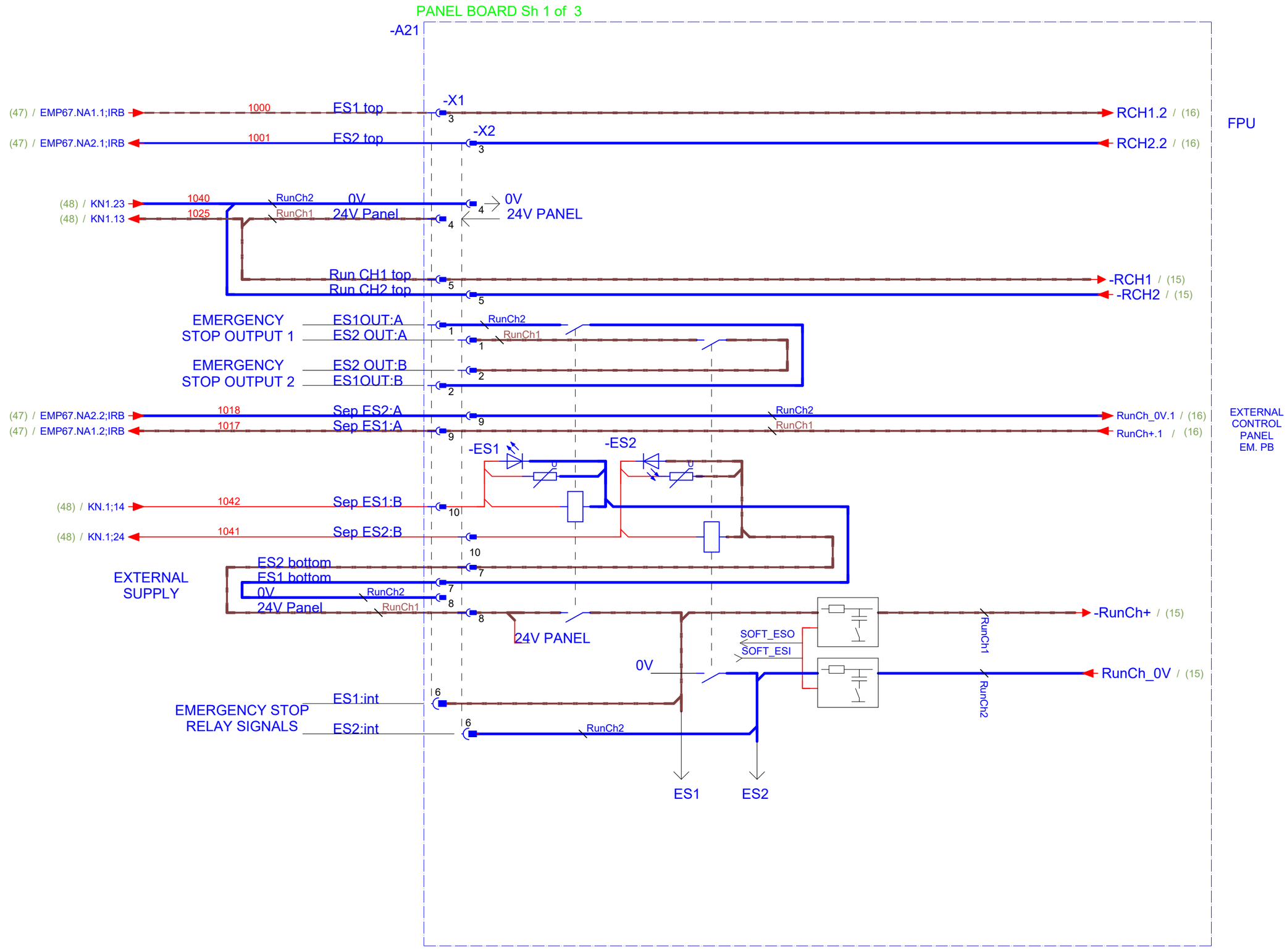

Latest revision:	EUROMAP 67	ABB	Lab/Office: RA/RDP	IRC5 DESIGN 14 Euromap 67 RUN CHAIN and PANEL BOARD A21 part one	Status: Approved	Plant: = Location: + Sublocation: +
Prepared by, date: A.Hägglund	Approved by, date: S.Hällgren 2024-03-25				Document no. 3HAC024120-005	Rev. Ind 02

We reserve all rights in this document and in the information contained therein. Reproduction, use or disclosure to third parties without express authority is strictly forbidden. © Copyright ABB

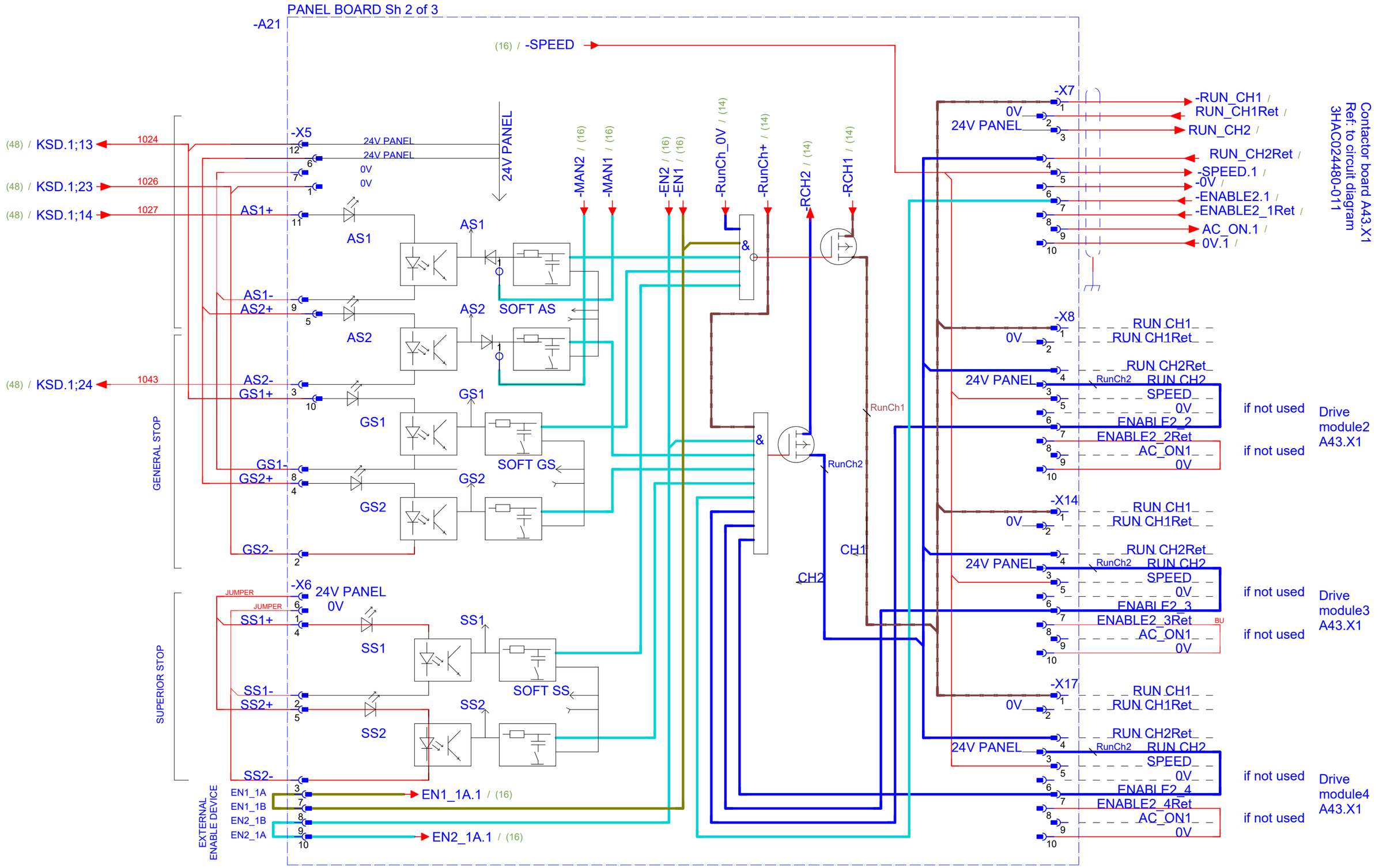

Latest revision:	EUROMAP 67	ABB	Lab/Office: RA/RDP	IRC5 DESIGN 14 Euromap 67 RUN CHAIN and PANEL BOARD A21 part two	Status: Approved Plant: = Location: + Sublocation: +
Prepared by, date: A.Hägglund	Approved by, date: S.Hällgren 2024-03-25				Document no. 3HAC024120-005 Rev. Ind 02 Page 15 Next 16 Total 35

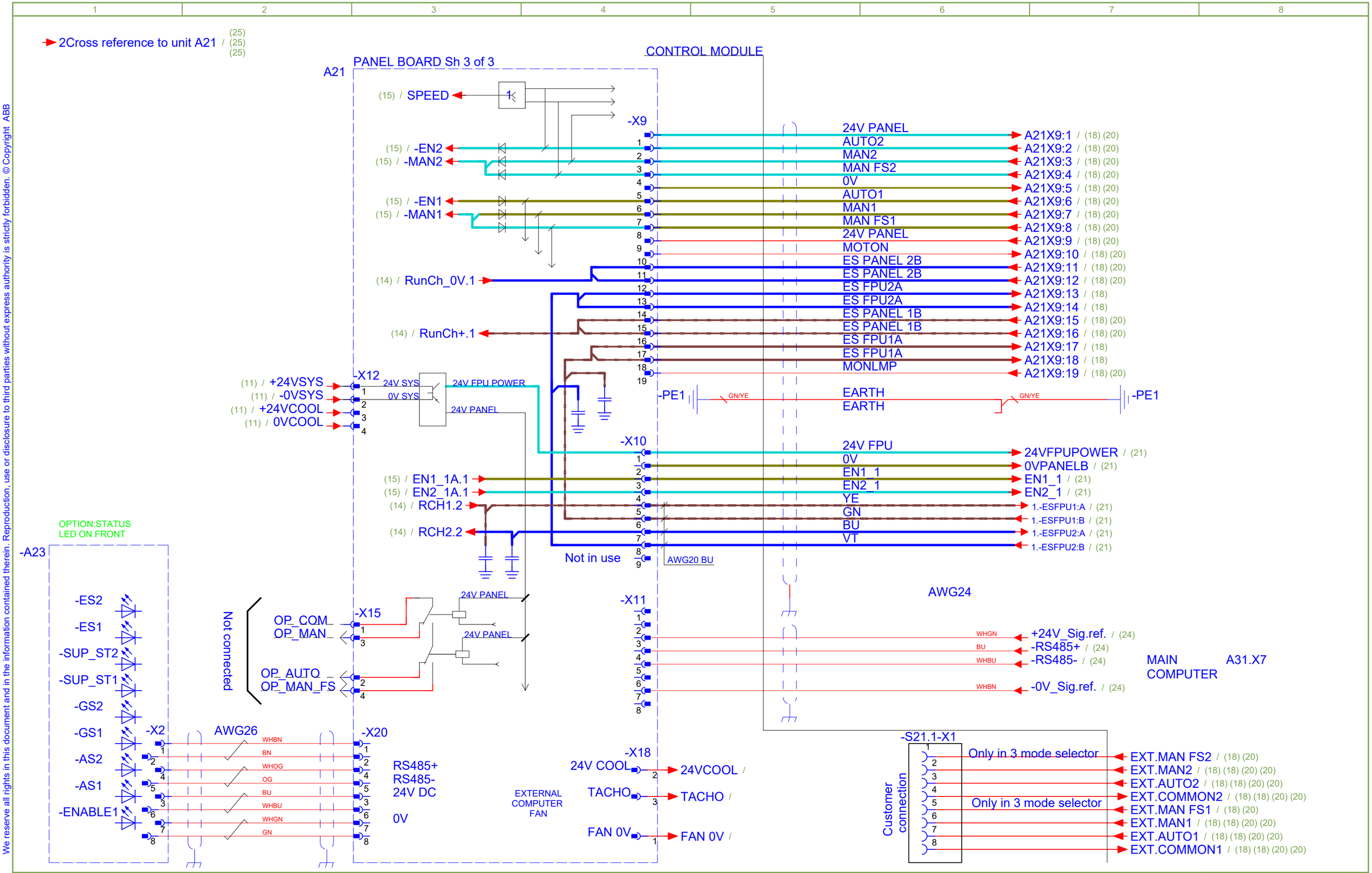

We reserve all rights in this document and in the information contained therein. Reproduction, use or disclosure to third parties without express authority is strictly forbidden. © Copyright ABB

Latest revision:	EUROMAP 67	ABB	Lab/Office: RA/RDP	IRC5 DESIGN 14 Euromap 67 RUN CHAIN and PANEL BOARD A21 part three	Status: Approved Plant: = Location: + Sublocation: +
Prepared by, date: A.Hägglund	Approved by, date: S.Hällgren 2024-03-25				Document no. 3HAC024120-005 Rev. Ind 02 Page 16 Next 16.1 Total 35

We reserve all rights in this document and in the information contained therein. Reproduction, use or disclosure to third parties without express authority is strictly forbidden. © Copyright ABB

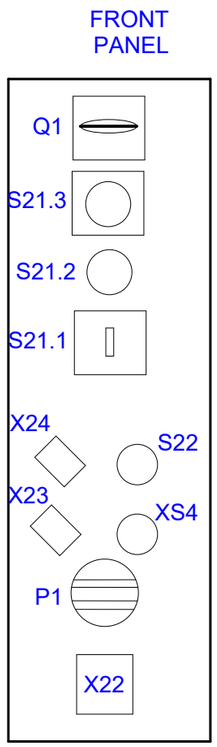

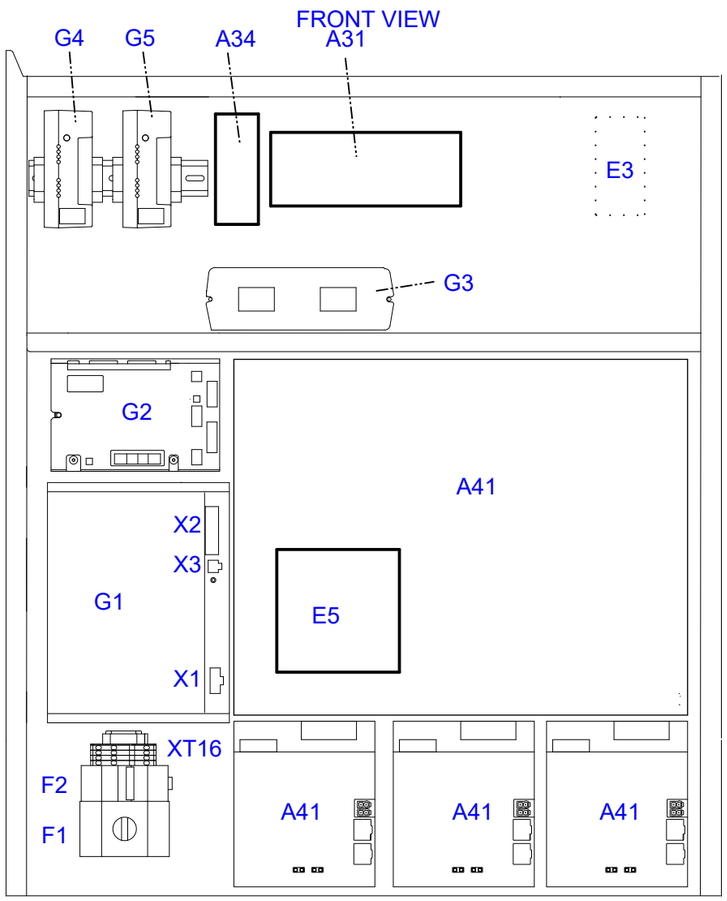

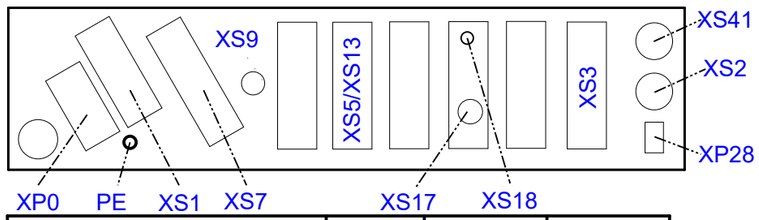

Denomination	Unit	Pos. No	Opt. No
Digital 24 VDC		I/O 1-4	716-1
AD Combi I/O		I/O 1-4	717-1
Digital with relay		I/O 1-4	718-1
Analog 4 in/4 out		I/O 1-4	719-1
Profibus DP Slave		I/O 1-4	720-1
Interbus-S Slave		I/O 1-4	722-1
CC-link slave		I/O 1-4	723-1
ENC unit		I/O 1-4	726-1
Digital Base 16in/16out		I/O 1	1541-1/-2
Digital Add on 16in/16out		I/O 2-5	1542-1/-2
Analogue Add on 4in/4out		I/O 2-5	1543-1/-2
Relay Add on 8RO/8DI		I/O 2-5	1544-1/-2
Ethernet switch	A34		604-1/-2
Ethernet switch	A62		901-1
Ethernet switch	A64		1341-1
Ethernet switch	A65		941-1

Opt. inside door with I/O and ETHERNET switch

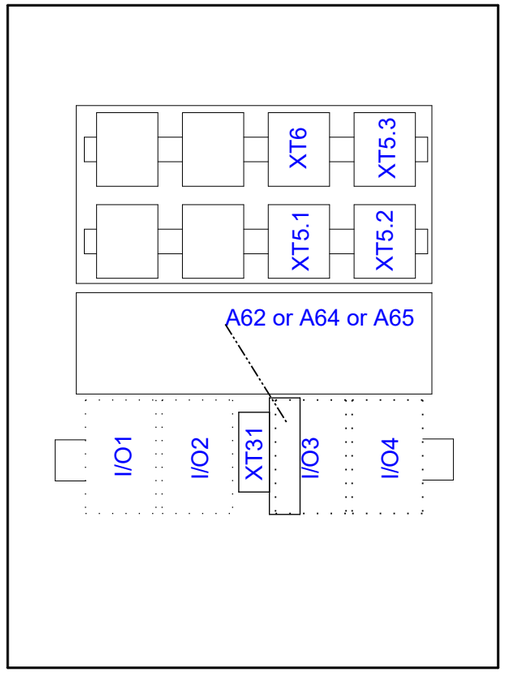

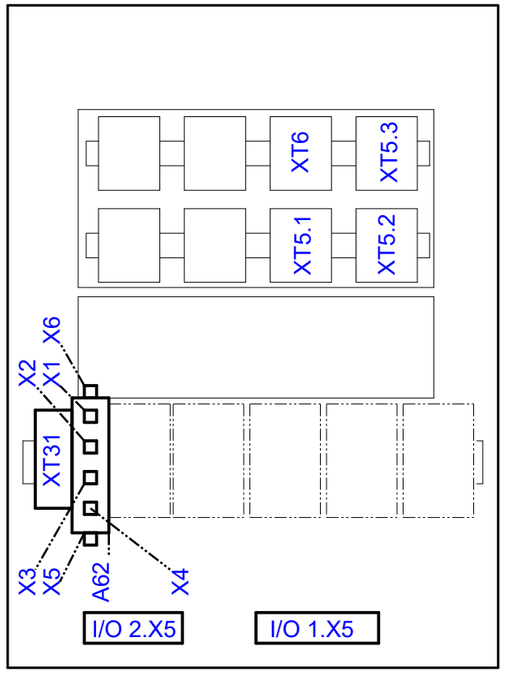

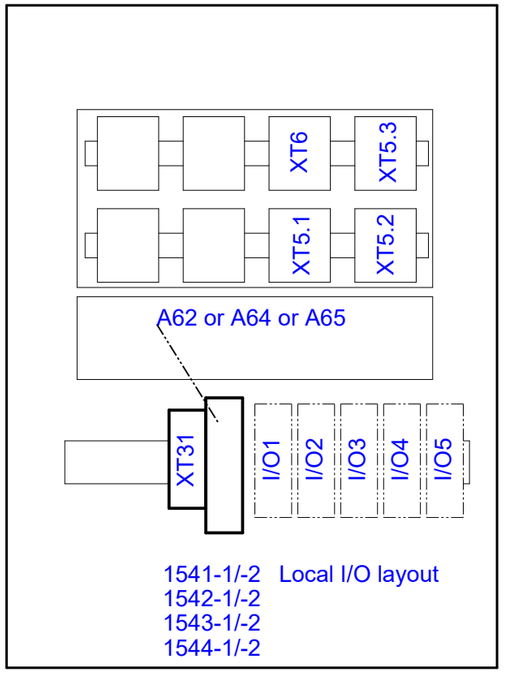

DSQC1030 Opt 1541-1/-2

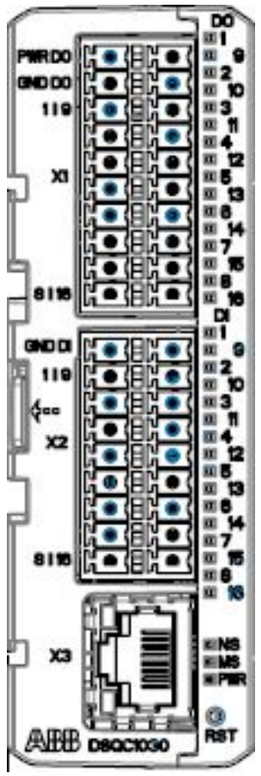

DSQC1031 Opt 1542-1/-2

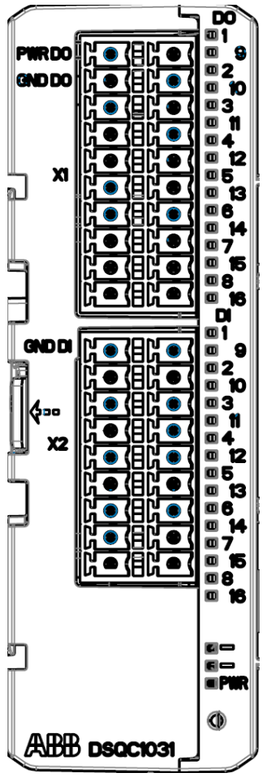

DSQC1032 Opt 1543-1/-2

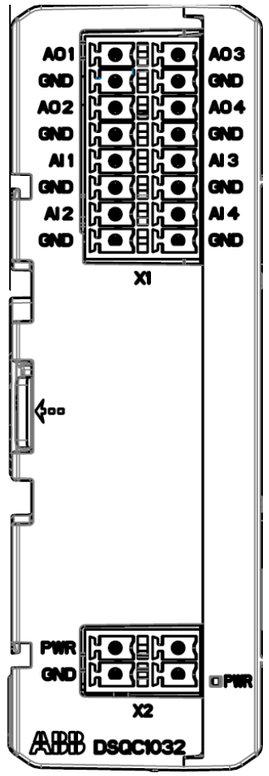

DSQC1033 Opt 1544-1/-2

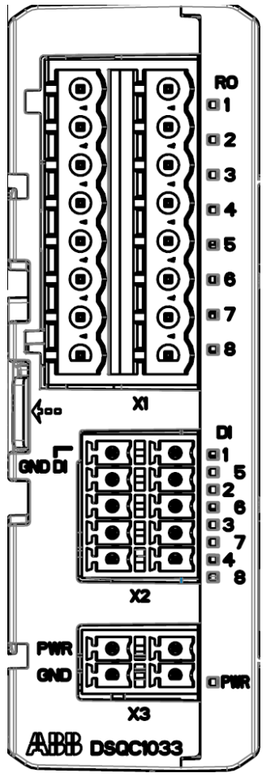

Latest revision:	EUROMAP 67	ABB	Lab/Office: RA/RDP	IRC5 DESIGN 14 Euromap 67 FRONT VIEW OF SINGLE CABINET MDU HV	Status: Approved Plant: = Location: + Sublocation: +
Prepared by, date: A.Hägglund	Approved by, date: S.Hällgren 2024-03-25				Document no. 3HAC024120-005 Rev. Ind 02 Page 16.1 Next 17 Total 35

We reserve all rights in this document and in the information contained therein. Reproduction, use or disclosure to third parties without express authority is strictly forbidden. © Copyright ABB

FRONT VIEW
MAIN DRIVE UNIT FOR IRB 120 - 1600
LV Low voltage

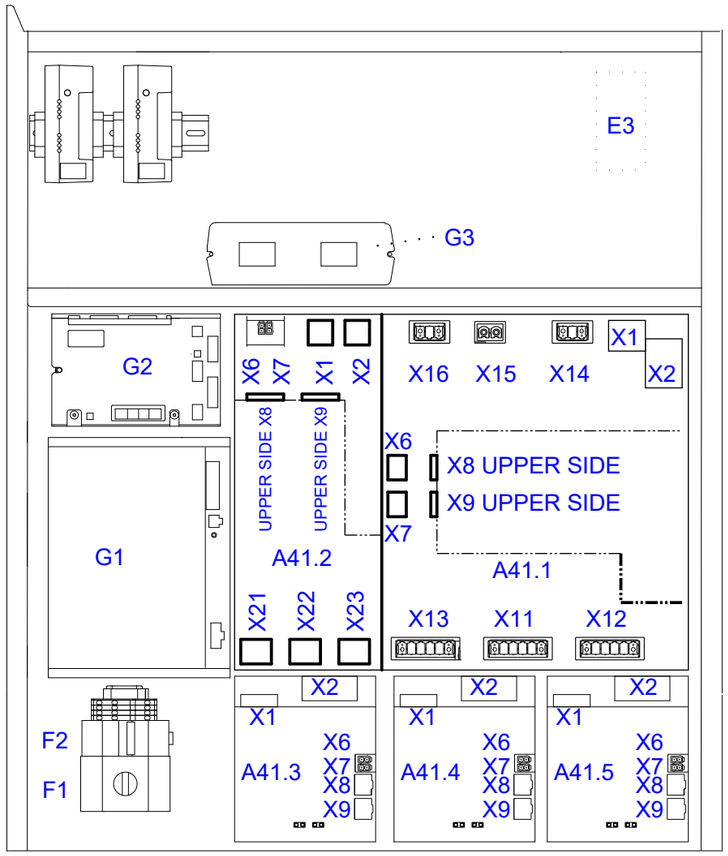

FRONT VIEW
MAIN DRIVE UNIT FOR IRB 2400 - 76XX
HV High voltage

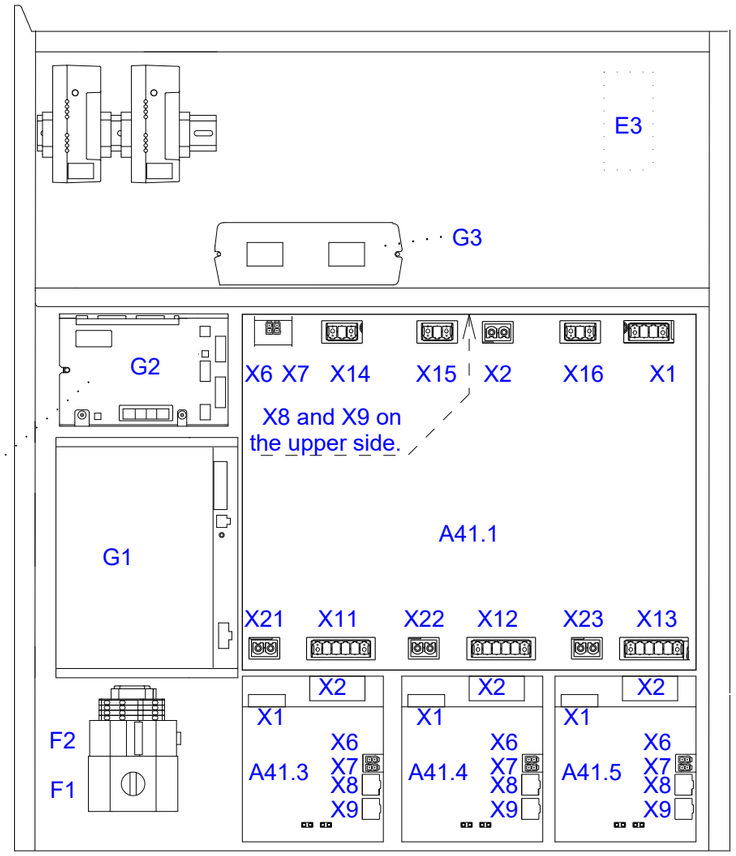

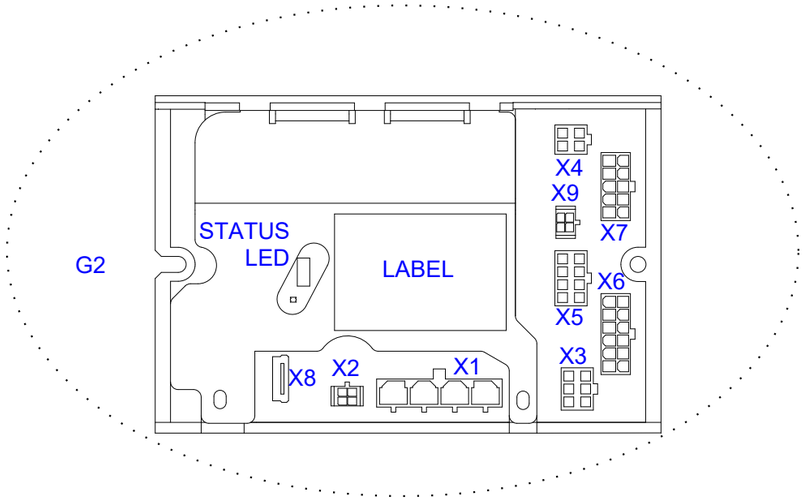

Latest revision:	EUROMAP 67	ABB	Lab/Office: RA/RDP	IRC5 DESIGN 14 Euromap 67 FRONT VIEW OF SINGLE CABINET MDU LV and HV	Status: Approved	Plant: = Location: + Sublocation: +
Prepared by, date: A.Hägglund	Approved by, date: S.Hällgren 2024-03-25				Document no. 3HAC024120-005	Rev. Ind 02

We reserve all rights in this document and in the information contained therein. Reproduction, use or disclosure to third parties without express authority is strictly forbidden. © Copyright ABB

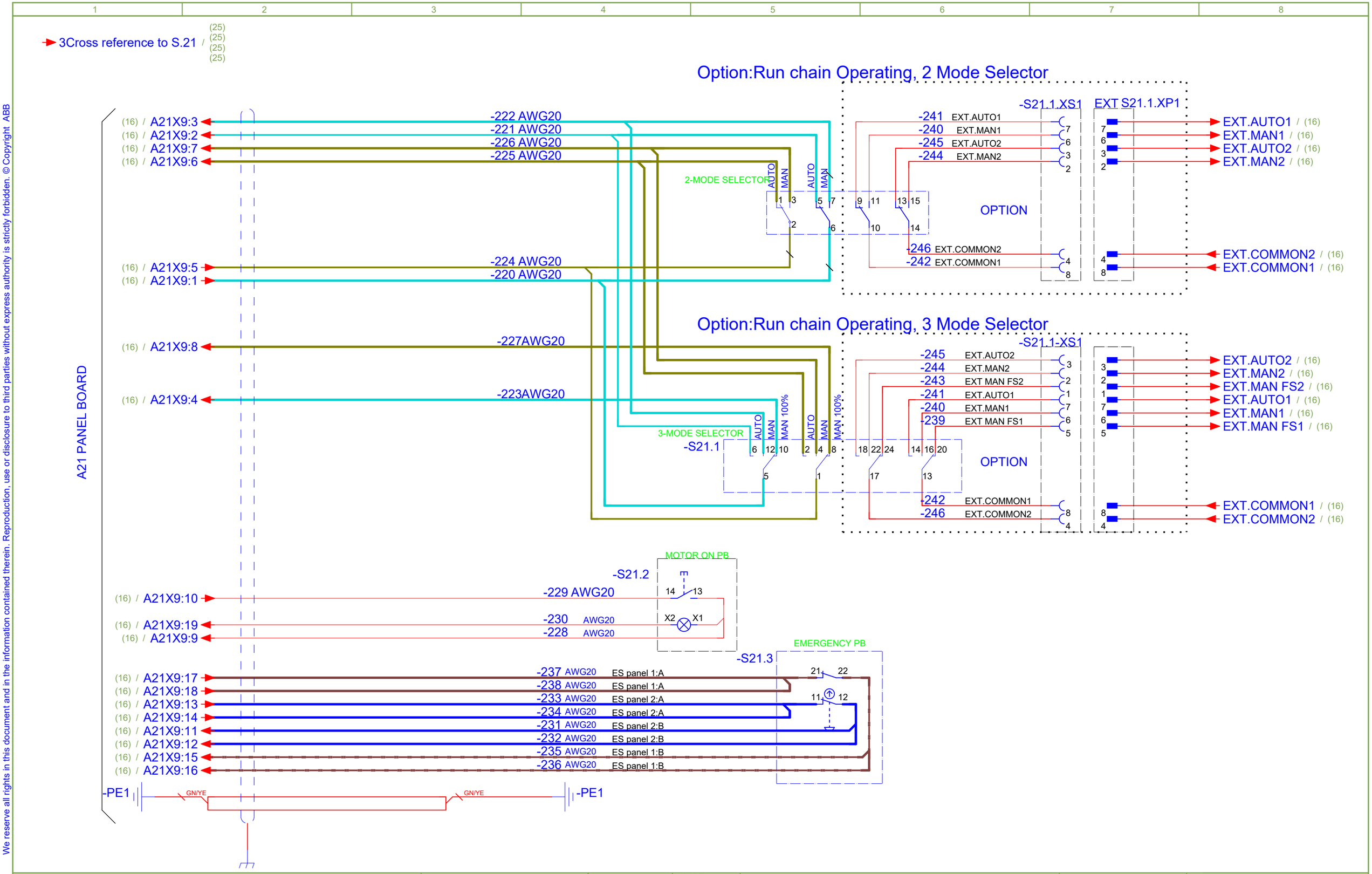

Latest revision:	EUROMAP 67	ABB	Lab/Office: RA/RDP	IRC5 DESIGN 14 Euromap 67 RUN CHAIN A21, EMERGENCY STOP, 2 and 3 MODE SELECTOR	Status: Approved Plant: = Location: + Sublocation: +
Prepared by, date: A.Hägglund / Approved by, date: S.Hällgren 2024-03-25					Document no. 3HAC024120-005 Rev. Ind 02 Page 18 Next 19 Total 35

We reserve all rights in this document and in the information contained therein. Reproduction, use or disclosure to third parties without express authority is strictly forbidden. © Copyright ABB

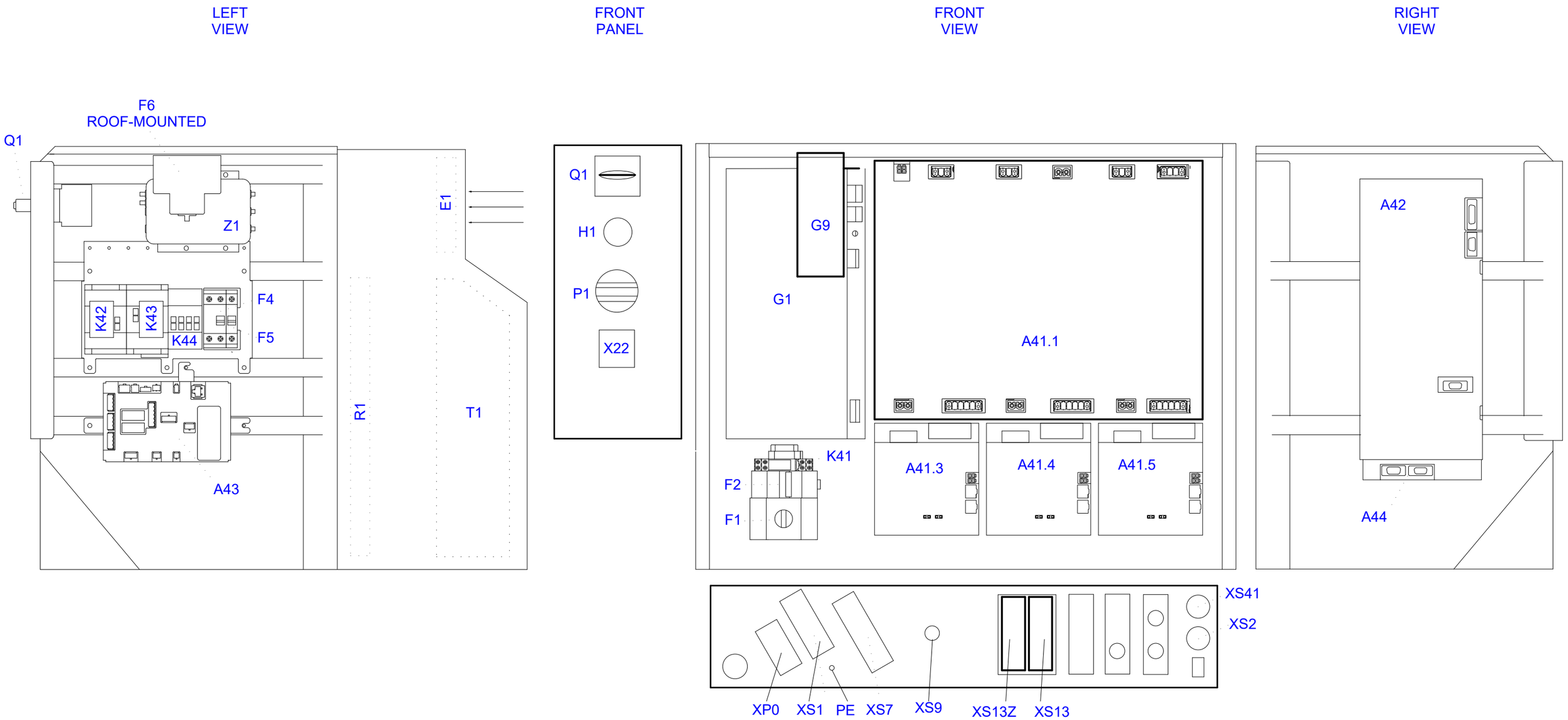

Latest revision:	EUROMAP 67	ABB	Lab/Office: RA/RDP	IRC5 DESIGN 14 Euromap 67 VIEW OF DRIVE MODULE CABINET	Status: Approved	Plant: = Location: + Sublocation: +
Prepared by, date: A.Hägglund	Approved by, date: S.Hällgren 2024-03-25				Document no. 3HAC024120-005	Rev. Ind 02
						Page 19 Next 20 Total 35

We reserve all rights in this document and in the information contained therein. Reproduction, use or disclosure to third parties without express authority is strictly forbidden. © Copyright ABB

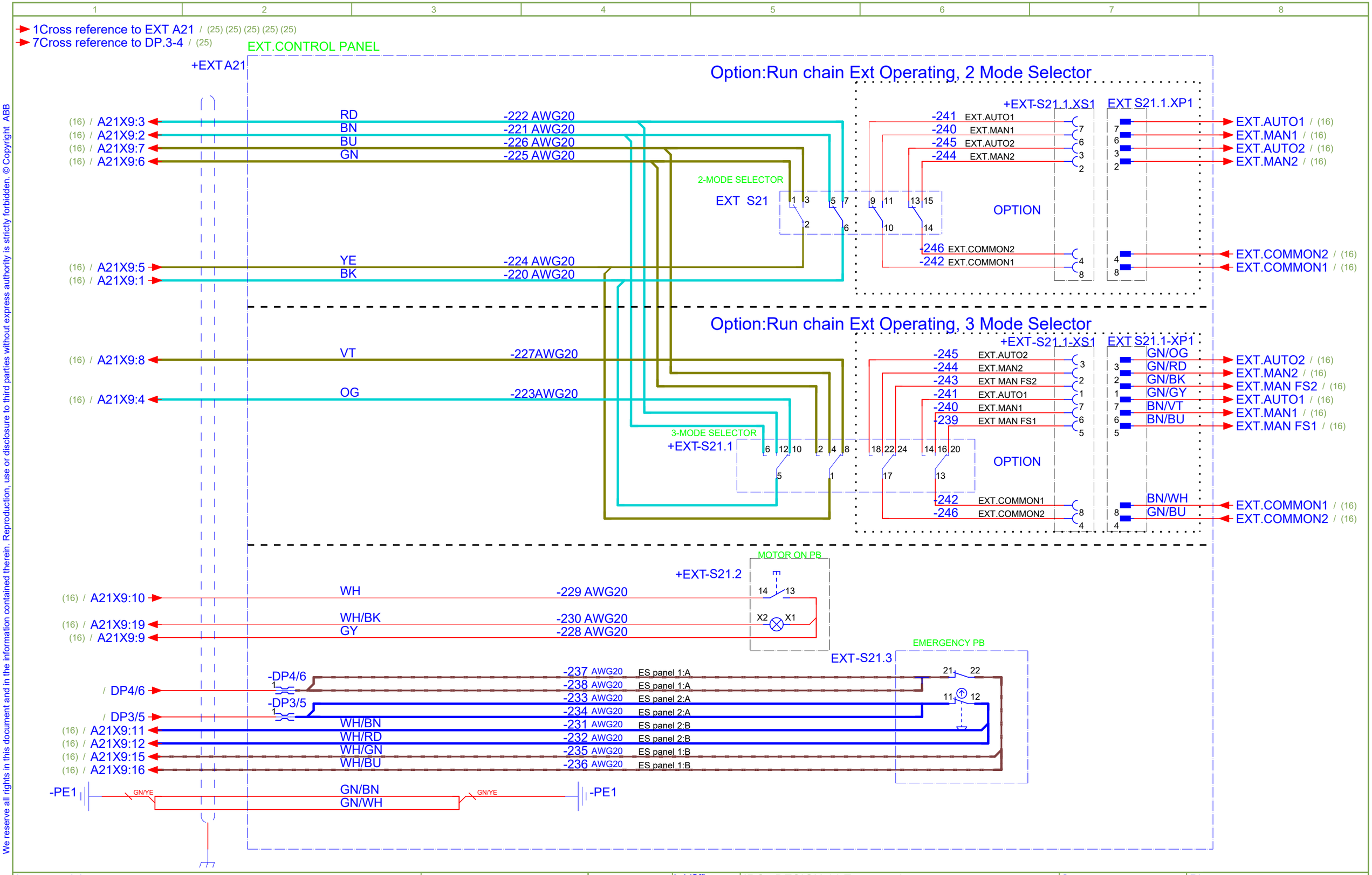

Latest revision:	EUROMAP 67	ABB Lab/Office: RA/RDP	IRC5 DESIGN 14 Euromap 67 RUN CHAIN A21, EXTERNAL EMERGENCY STOP, EXTERNAL 2 AND 3 MODE SELECTOR	Status: Approved	Plant: = Location: + Sublocation: +
Prepared by, date: A.Hägglund	Approved by, date: S.Hällgren 2024-03-25			Document no. 3HAC024120-005	Rev. Ind 02
					Page 20 Next 21 Total 35

We reserve all rights in this document and in the information contained therein. Reproduction, use or disclosure to third parties without express authority is strictly forbidden. © Copyright ABB

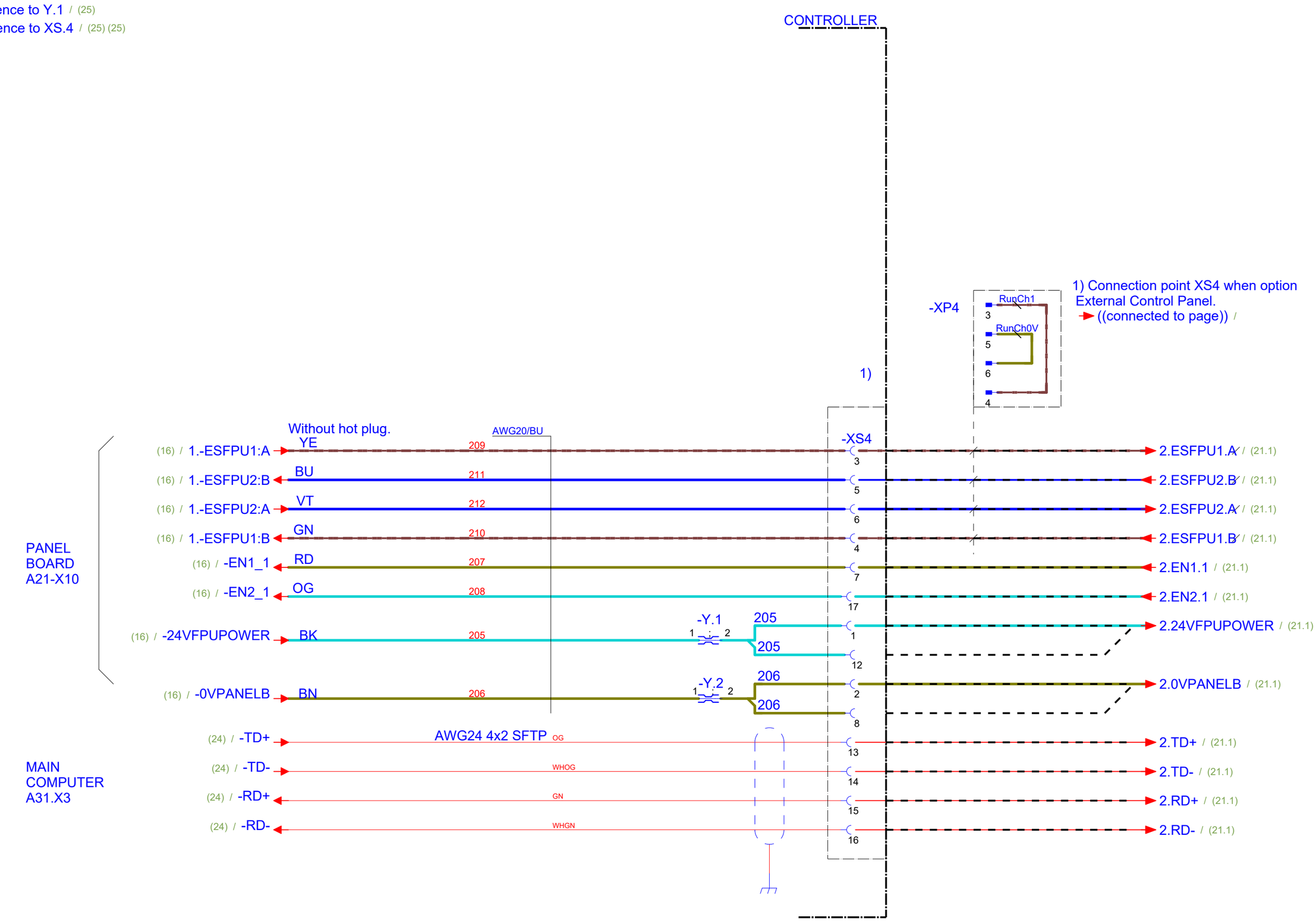

Latest revision:	EUROMAP 67	ABB Lab/Office: RA/RDP	IRC5 DESIGN 14 Euromap 67 FPU, FLEXPENDANT and option HOT PLUG	Status: Approved	Plant: = Location: + Sublocation: +
Prepared by, date: A.Hägglund	Approved by, date: S.Hällgren 2024-03-25			Document no. 3HAC024120-005	Rev. Ind 02
					Page 21 Next 21.1 Total 35

We reserve all rights in this document and in the information contained therein. Reproduction, use or disclosure to third parties without express authority is strictly forbidden. © Copyright ABB

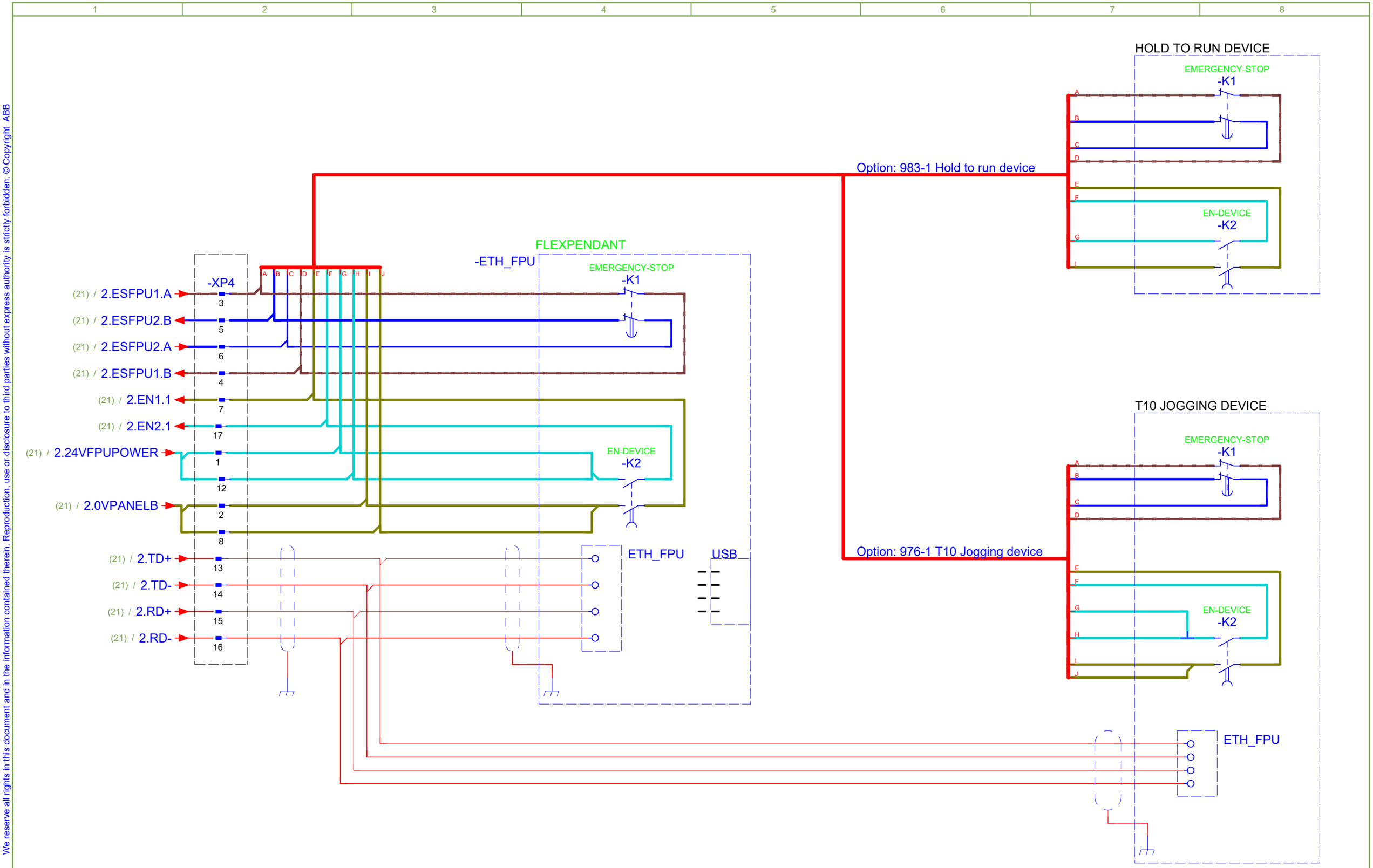

Latest revision:	EUROMAP 67	ABB	Lab/Office: RA/RDP	IRC5 DESIGN 14 Euromap 67 FPU, FLEXPENDANT and Opt. HOLD TO RUN DEVICE T10 JOGGING DEVICE	Status: Approved	Plant: = Location: + Sublocation: +
Prepared by, date: A.Hägglund	Approved by, date: S.Hällgren 2024-03-25				Document no. 3HAC024120-005	Rev. Ind 02
						Page 21.1 Next 22 Total 35

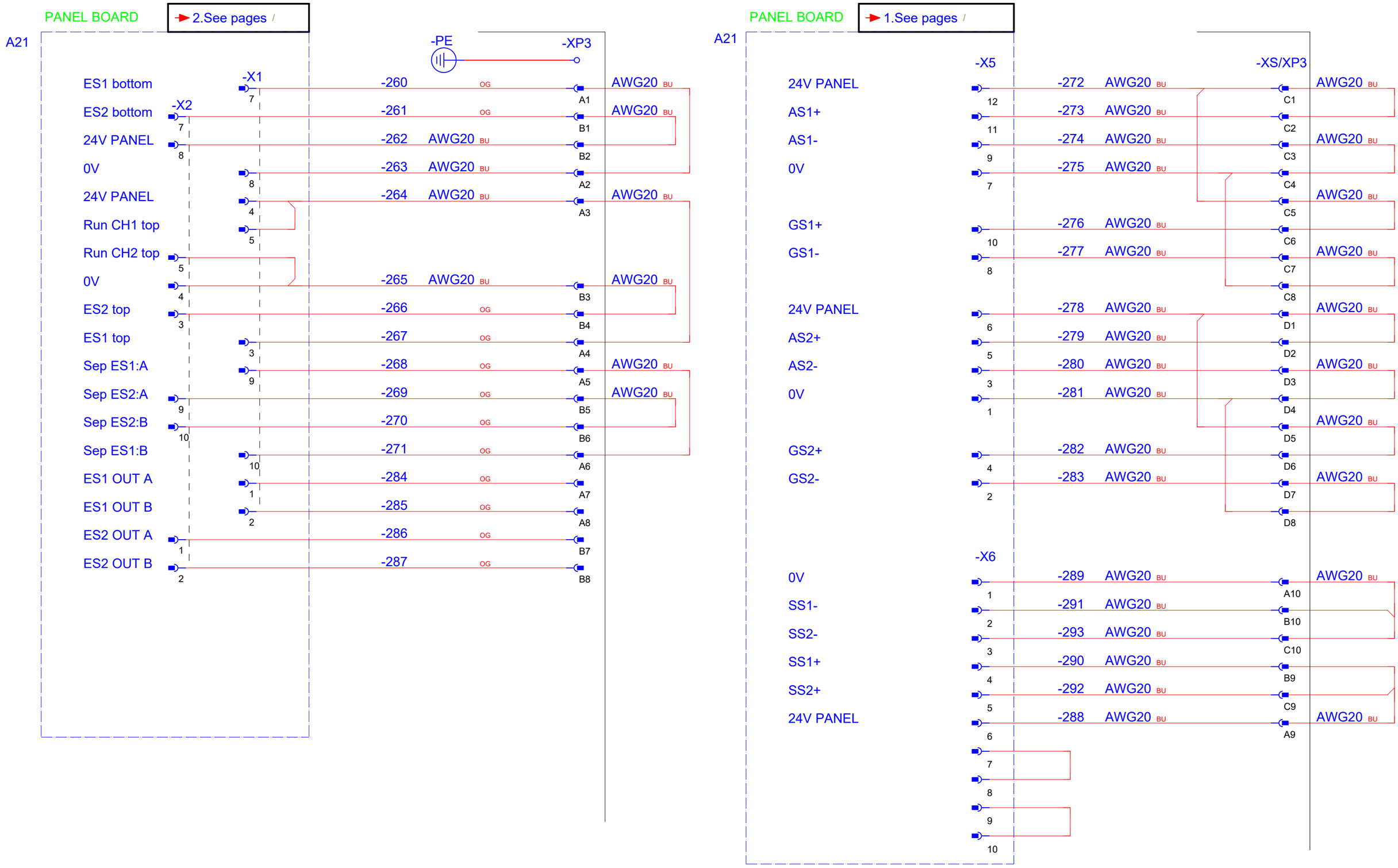

We reserve all rights in this document and in the information contained therein. Reproduction, use or disclosure to third parties without express authority is strictly forbidden. © Copyright ABB

Latest revision:	EUROMAP 67	Lab/Office: RA/RDP	IRC5 DESIGN 14 Euromap 67 PANEL BOARD A21 Opt:EXT.CUSTOMER. CONNECT. SYSTEM SIGNALS	Status: Approved	Plant: = Location: + Sublocation: +
Prepared by, date: A.Hägglund	Approved by, date: S.Hällgren 2024-03-25			Document no. 3HAC024120-005	Rev. Ind 02
					Page 22 Next 23 Total 35

We reserve all rights in this document and in the information contained therein. Reproduction, use or disclosure to third parties without express authority is strictly forbidden. © Copyright ABB

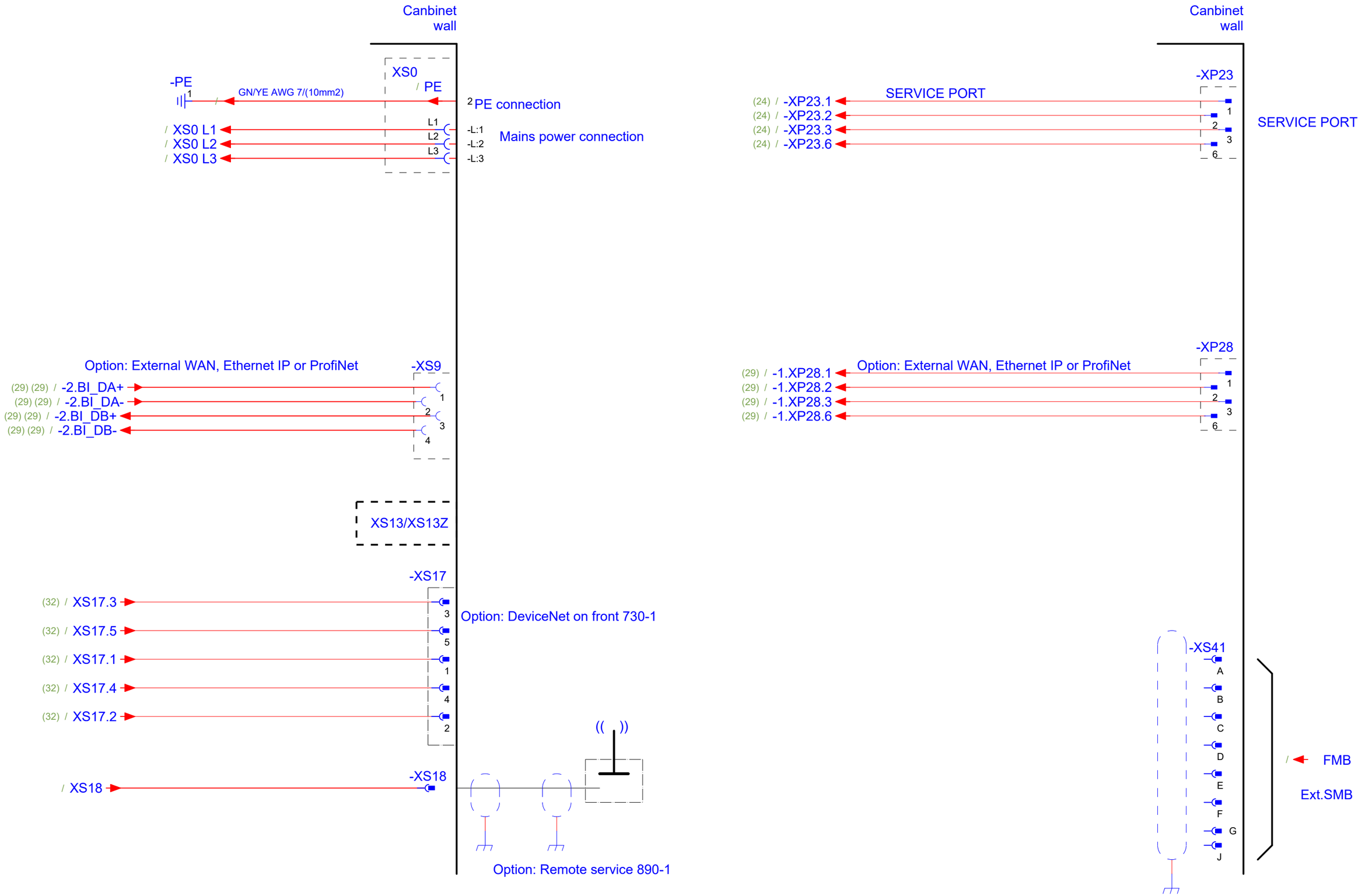

Latest revision:	EUROMAP 67	ABB	Lab/Office: RA/RDP	IRC5 DESIGN 14 Euromap 67 CONTACT AT THE CABINET WALL	Status: Approved	Plant: = Location: + Sublocation: +
Prepared by, date: A.Hägglund	Approved by, date: S.Hällgren 2024-03-25				Document no. 3HAC024120-005	Rev. Ind 02
						Page 23 Next 24 Total 35

We reserve all rights in this document and in the information contained therein. Reproduction, use or disclosure to third parties without express authority is strictly forbidden. © Copyright ABB

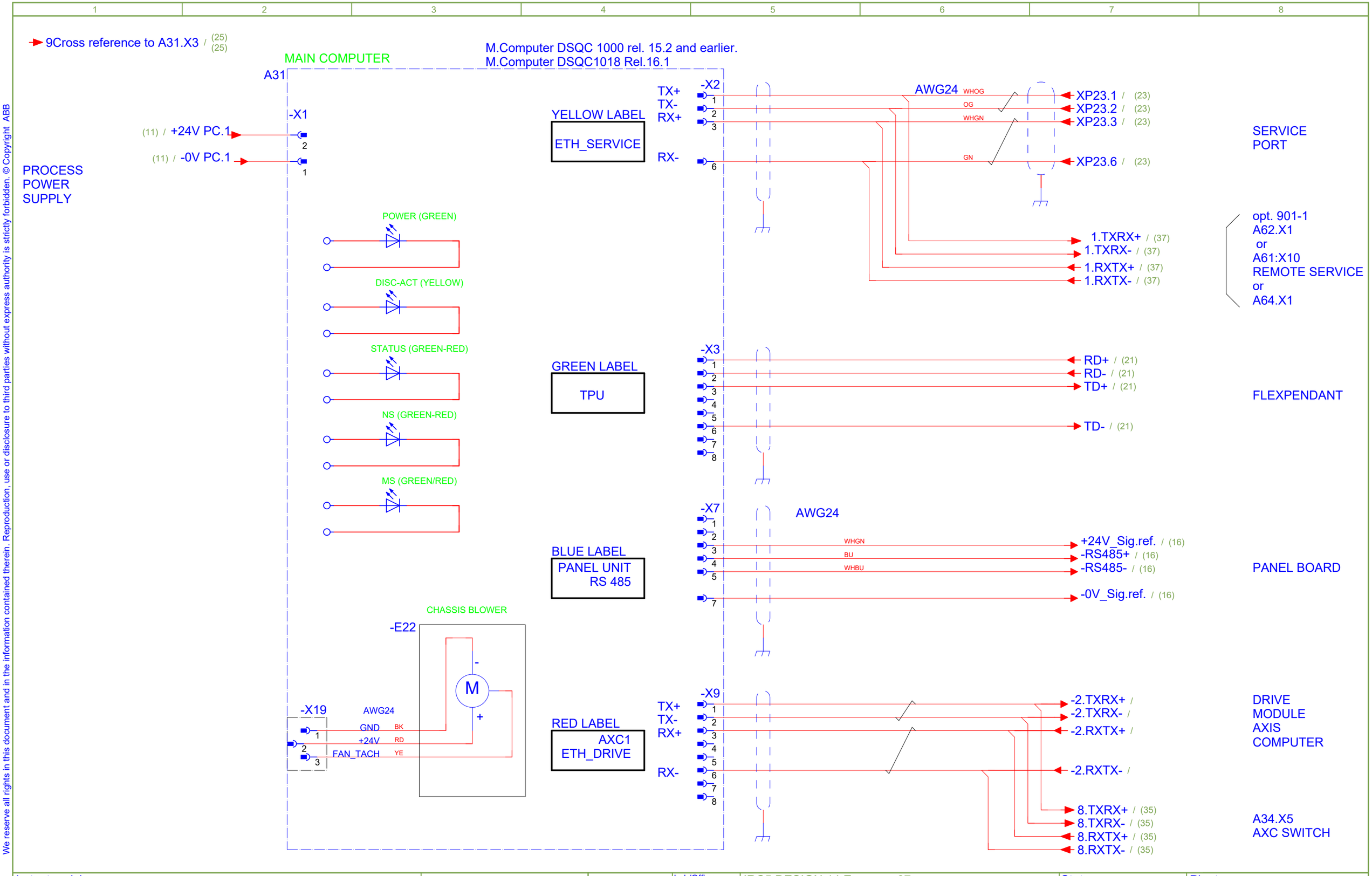

Latest revision:	EUROMAP 67	ABB	Lab/Office: RA/RDP	IRC5 DESIGN 14 Euromap 67 MAIN COMPUTER A31 DSQC1000/DSQC1018	Status: Approved	Plant: = Location: + Sublocation: +
Prepared by, date: A.Hägglund	Approved by, date: S.Hällgren 2024-03-25				Document no. 3HAC024120-005	Rev. Ind 02

We reserve all rights in this document and in the information contained therein. Reproduction, use or disclosure to third parties without express authority is strictly forbidden. © Copyright ABB

A42 Axis computer unit

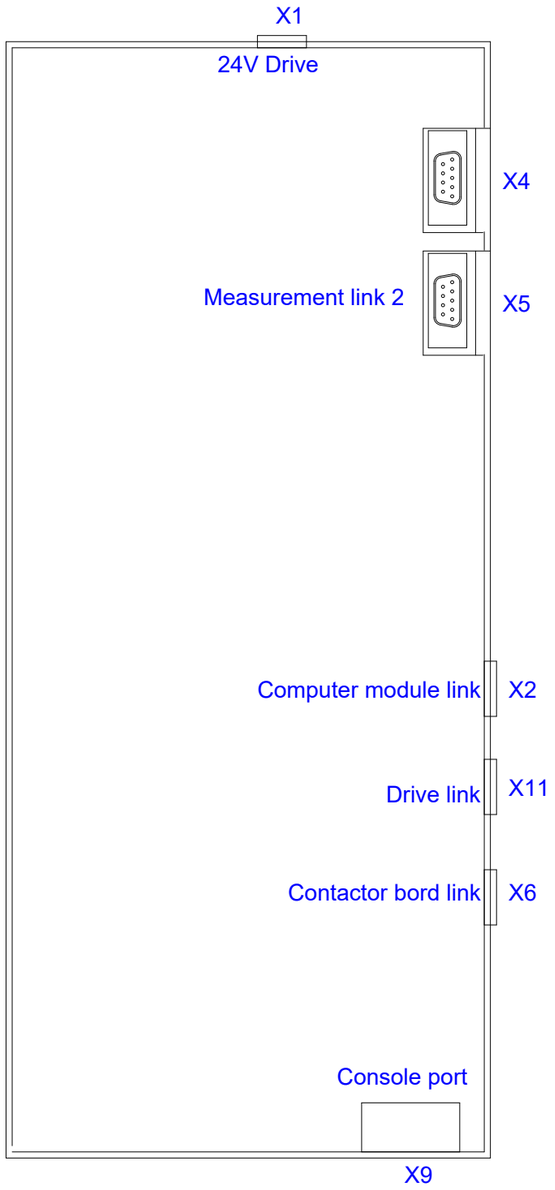

A43 Contactor unit

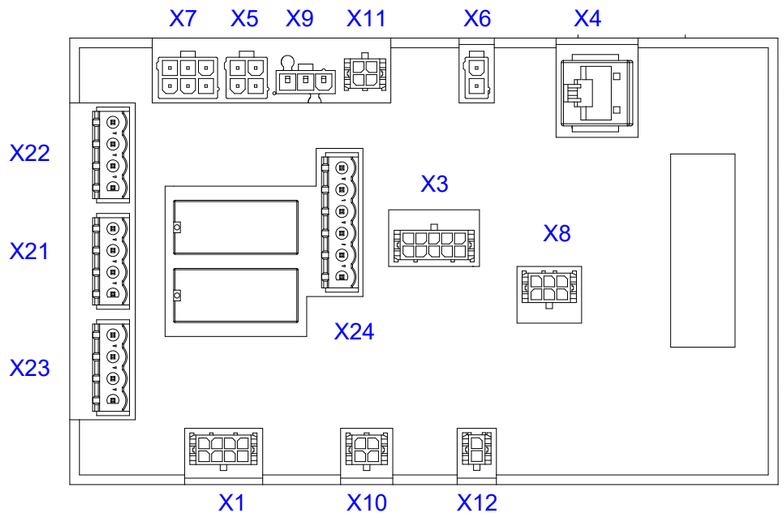

A44.2 Safe move

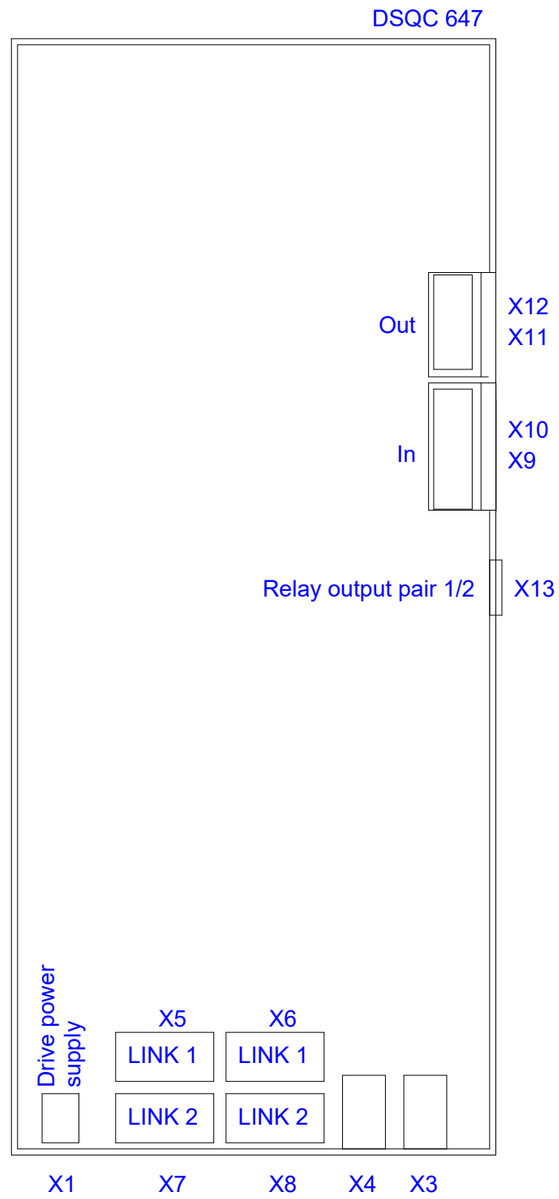

A44.1 EPS unit

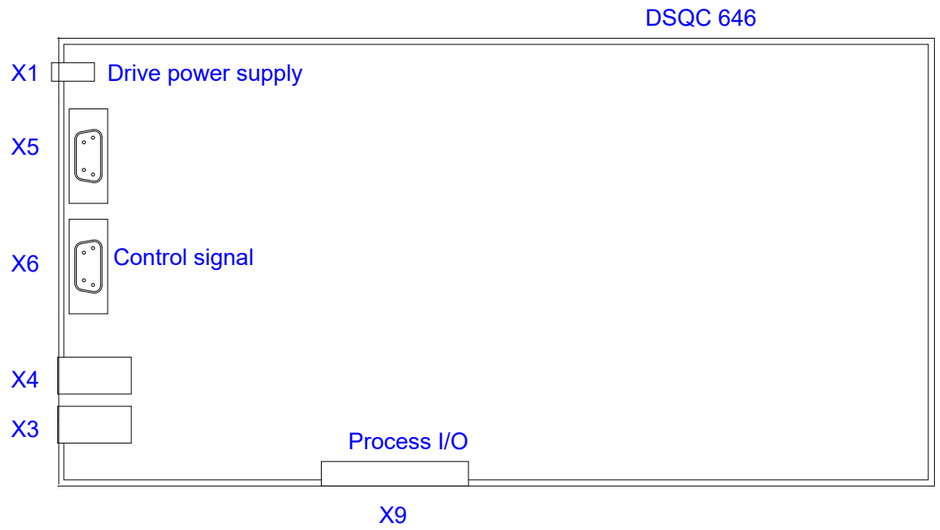

Latest revision:	EUROMAP 67	ABB	Lab/Office: RA/RDP	IRC5 DESIGN 14 Euromap 67 VIEW OF CONTACTOR & AXIS COMPUTER UNIT	Status: Approved	Plant: = Location: + Sublocation: +
Prepared by, date: A.Hägglund	Approved by, date: S.Hällgren 2024-03-25				Document no. 3HAC024120-005	Rev. Ind 02

Page 24.1
Next 25
Total 35

We reserve all rights in this document and in the information contained therein. Reproduction, use or disclosure to third parties without express authority is strictly forbidden. © Copyright ABB

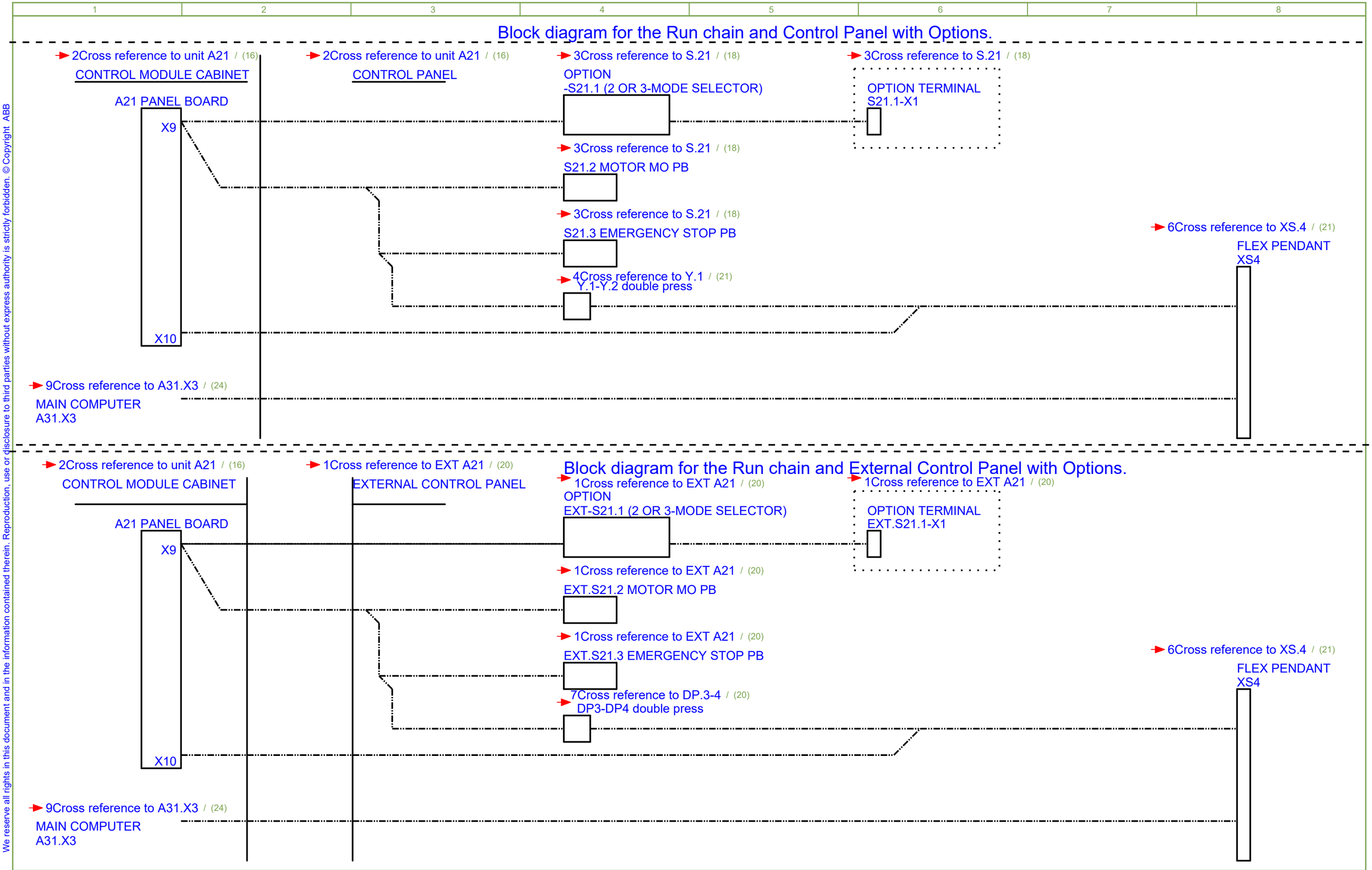

Latest revision:	EUROMAP 67	ABB Lab/Office: RA/RDP	IRC5 DESIGN 14 Euromap 67 RUN CHAIN and PANEL BOARD block diagram A21	Status: Approved	Plant: = Location: + Sublocation: +
Prepared by, date: A.Hägglund	Approved by, date: S.Hällgren 2024-03-25			Document no. 3HAC024120-005	Rev. Ind 02

We reserve all rights in this document and in the information contained therein. Reproduction, use or disclosure to third parties without express authority is strictly forbidden. © Copyright ABB

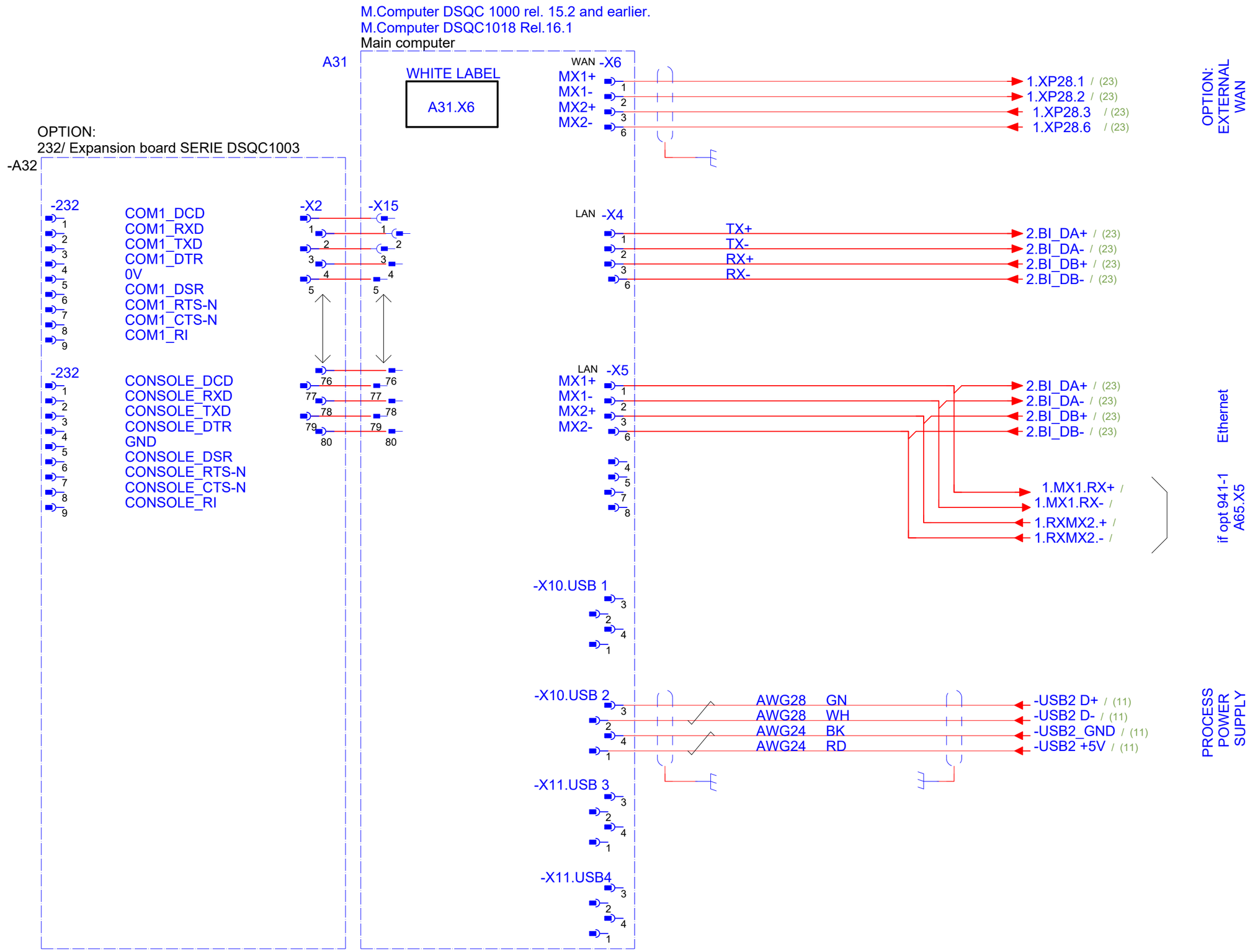

Latest revision:	EUROMAP 67	ABB	Lab/Office: RA/RDP	IRC5 DESIGN 14 Euromap 67 MAIN COMPUTER A31 DSQC1000/DSQC1018 ; A32 DSQC1003	Status: Approved Plant: = Location: + Sublocation: +
Prepared by, date: A.Hägglund	Approved by, date: S.Hällgren 2024-03-25				Document no. 3HAC024120-005 Rev. Ind 02 Page 29 Next 32 Total 35

We reserve all rights in this document and in the information contained therein. Reproduction, use or disclosure to third parties without express authority is strictly forbidden. © Copyright ABB

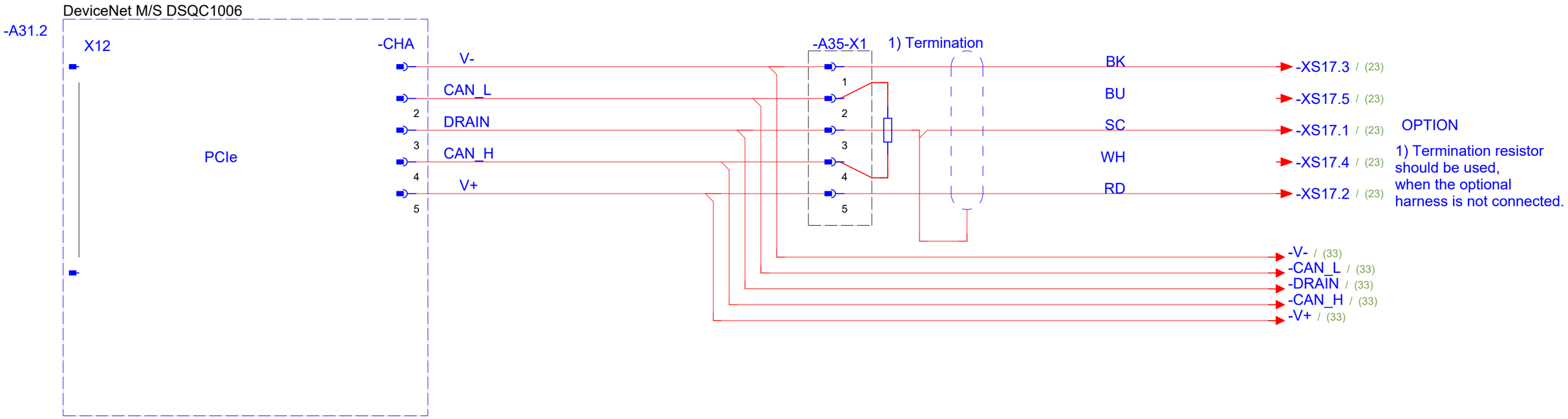

OPTION

1) Termination resistor should be used, when the optional harness is not connected.

Latest revision:	EUROMAP 67	ABB	Lab/Office: RA/RDP	IRC5 DESIGN 14 Euromap 67 DEVICENET A31.2 M/S DSQC1006	Status: Approved	Plant: = Location: + Sublocation: +
Prepared by, date: A.Hägglund	Approved by, date: S.Hällgren 2024-03-25				Document no. 3HAC024120-005	Rev. Ind 02

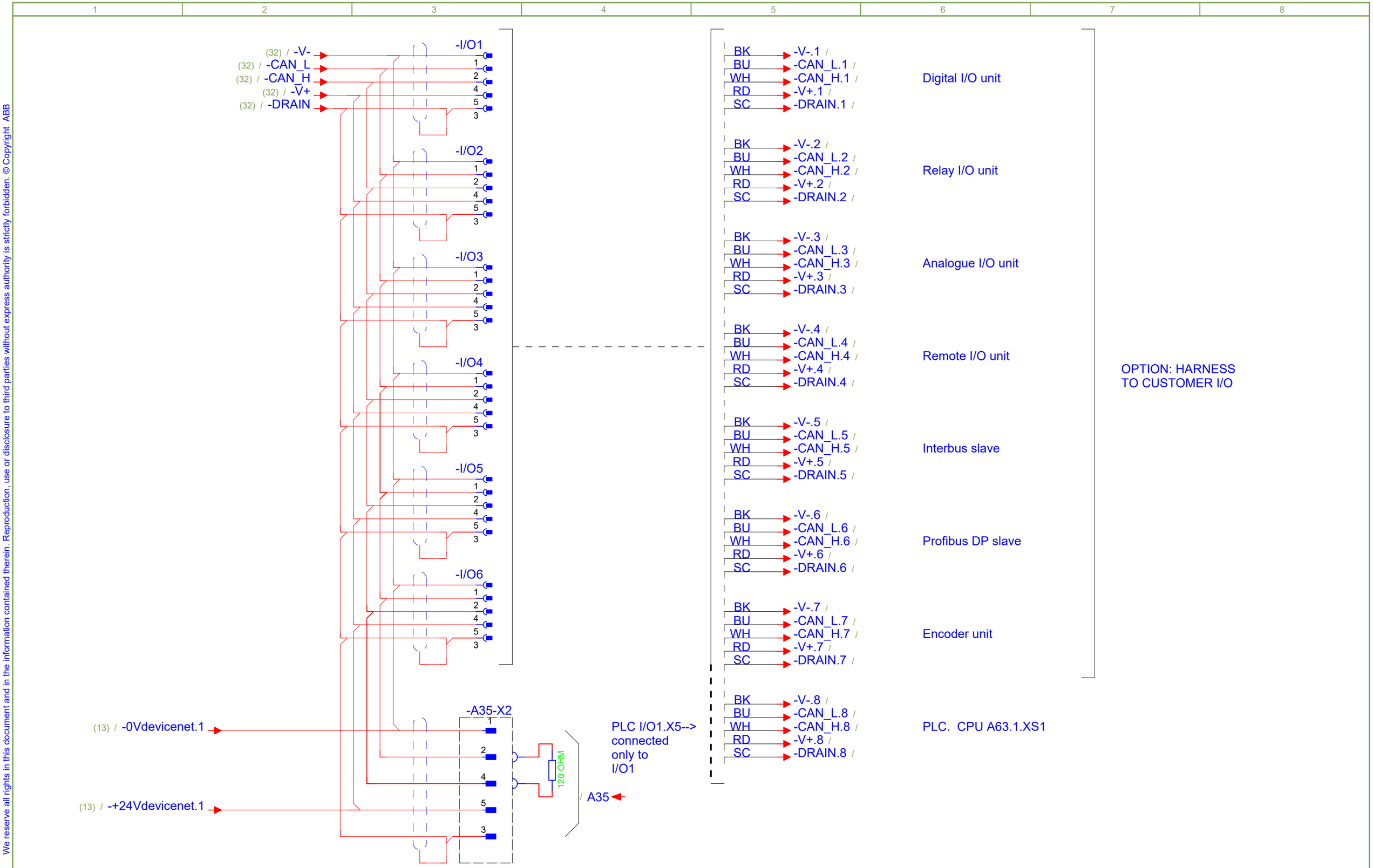

We reserve all rights in this document and in the information contained therein. Reproduction, use or disclosure to third parties without express authority is strictly forbidden. © Copyright ABB

Latest revision:	EUROMAP 67	ABB	Lab/Office: RA/RDP	IRC5 DESIGN 14 Euromap 67 DEVICENET ADAPTER	Status: Approved
					Plant: = Location: + Sublocation: +
Prepared by, date: A.Hägglund	Approved by, date: S.Hällgren 2024-03-25				Document no. 3HAC024120-005
					Rev. Ind 02
					Page 33 Next 34 Total 35

We reserve all rights in this document and in the information contained therein. Reproduction, use or disclosure to third parties without express authority is strictly forbidden. © Copyright ABB

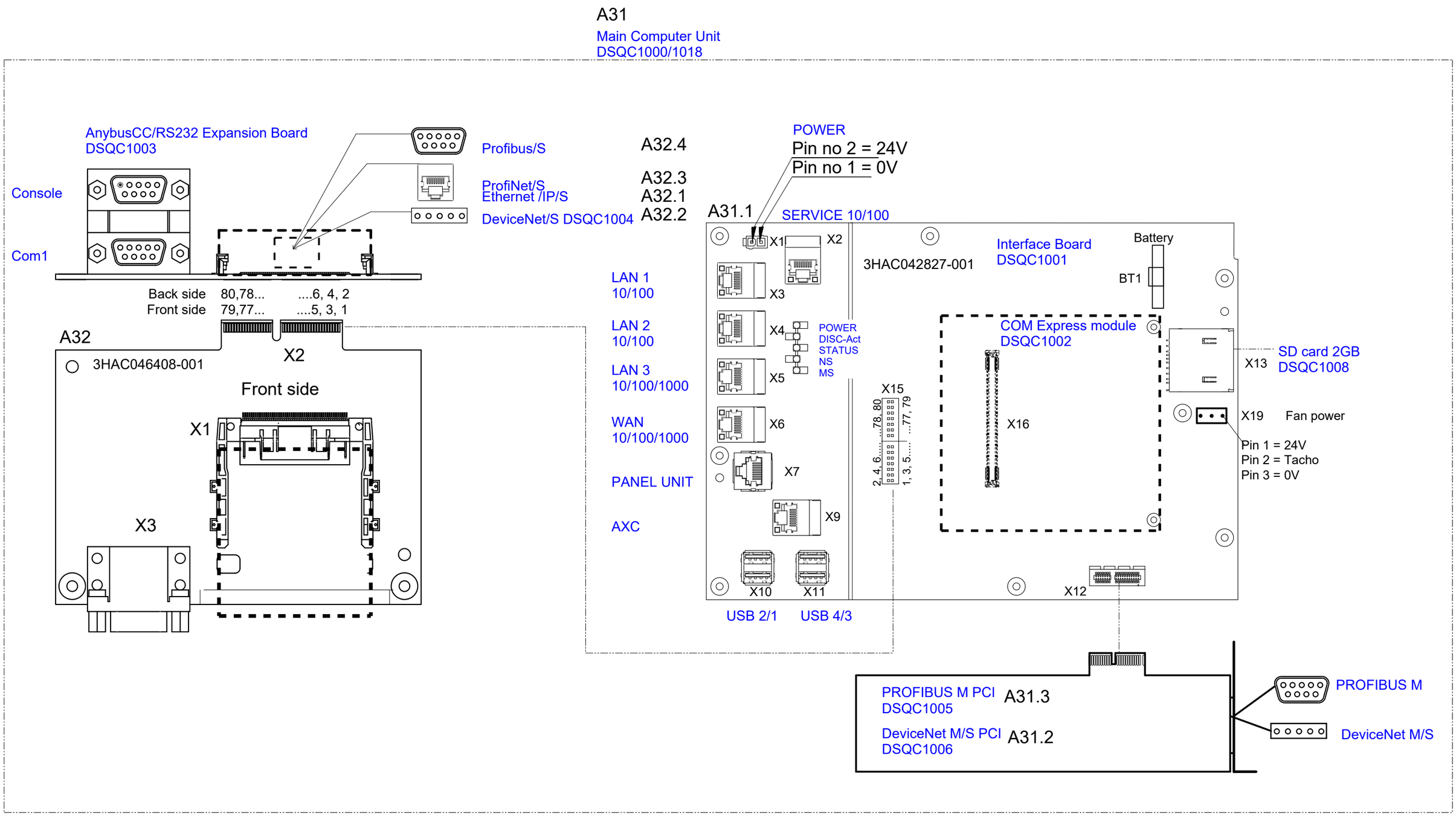

Latest revision:	EUROMAP 67	ABB	Lab/Office: RA/RDP	IRC5 DESIGN 14 Euromap 67 Main Computer/AnybusCC/RS232 Exp./Interface Board/	Status: Approved	Plant: = Location: + Sublocation: +
Prepared by, date: A.Hägglund	Approved by, date: S.Hällgren 2024-03-25				Document no. 3HAC024120-005	Rev. Ind 02

We reserve all rights in this document and in the information contained therein. Reproduction, use or disclosure to third parties without express authority is strictly forbidden. © Copyright ABB

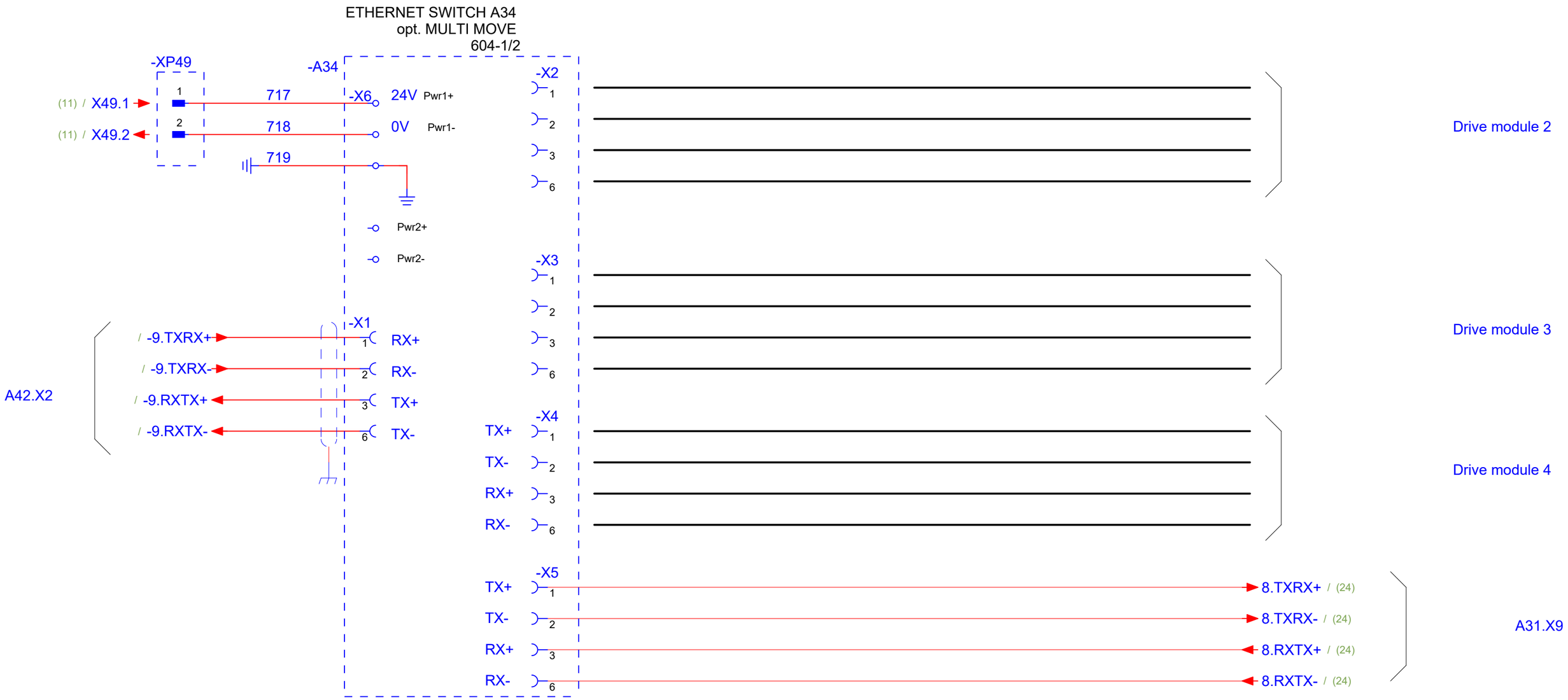

Latest revision:	EUROMAP 67	ABB	Lab/Office: RA/RDP	IRC5 DESIGN 14 Euromap 67 ETHERNET SWITCH A34, option MULTI MOVE 604-1/2	Status: Approved	Plant: = Location: + Sublocation: +
Prepared by, date: A.Hägglund	Approved by, date: S.Hällgren 2024-03-25				Document no. 3HAC024120-005	Rev. Ind 02

Page 35
Next 36
Total 35

Adapter harness for Euromap 67 3HAC063906-001

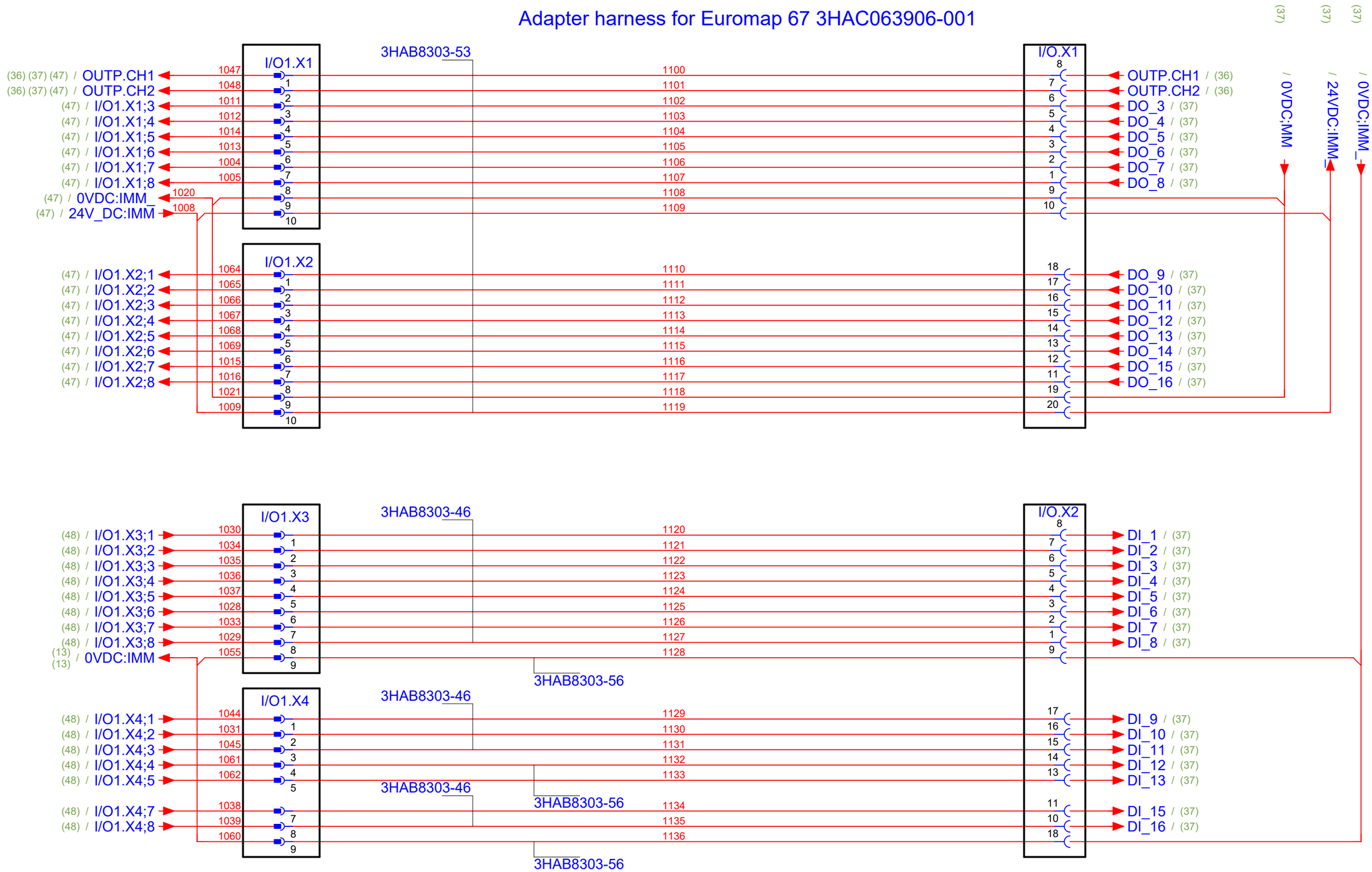

We reserve all rights in this document and in the information contained therein. Reproduction, use or disclosure to third parties without express authority is strictly forbidden. © Copyright ABB

Latest revision:	EUROMAP 67	ABB Lab/Office: RA/RDP	IRC5 DESIGN 14 Euromap 67 I/O ADAPTER HARNESS	Status: Approved	Plant: = Location: + Sublocation: +
Prepared by, date: A.Hägglund	Approved by, date: S.Hällgren 2024-03-25			Document no. 3HAC024120-005	Rev. Ind 02

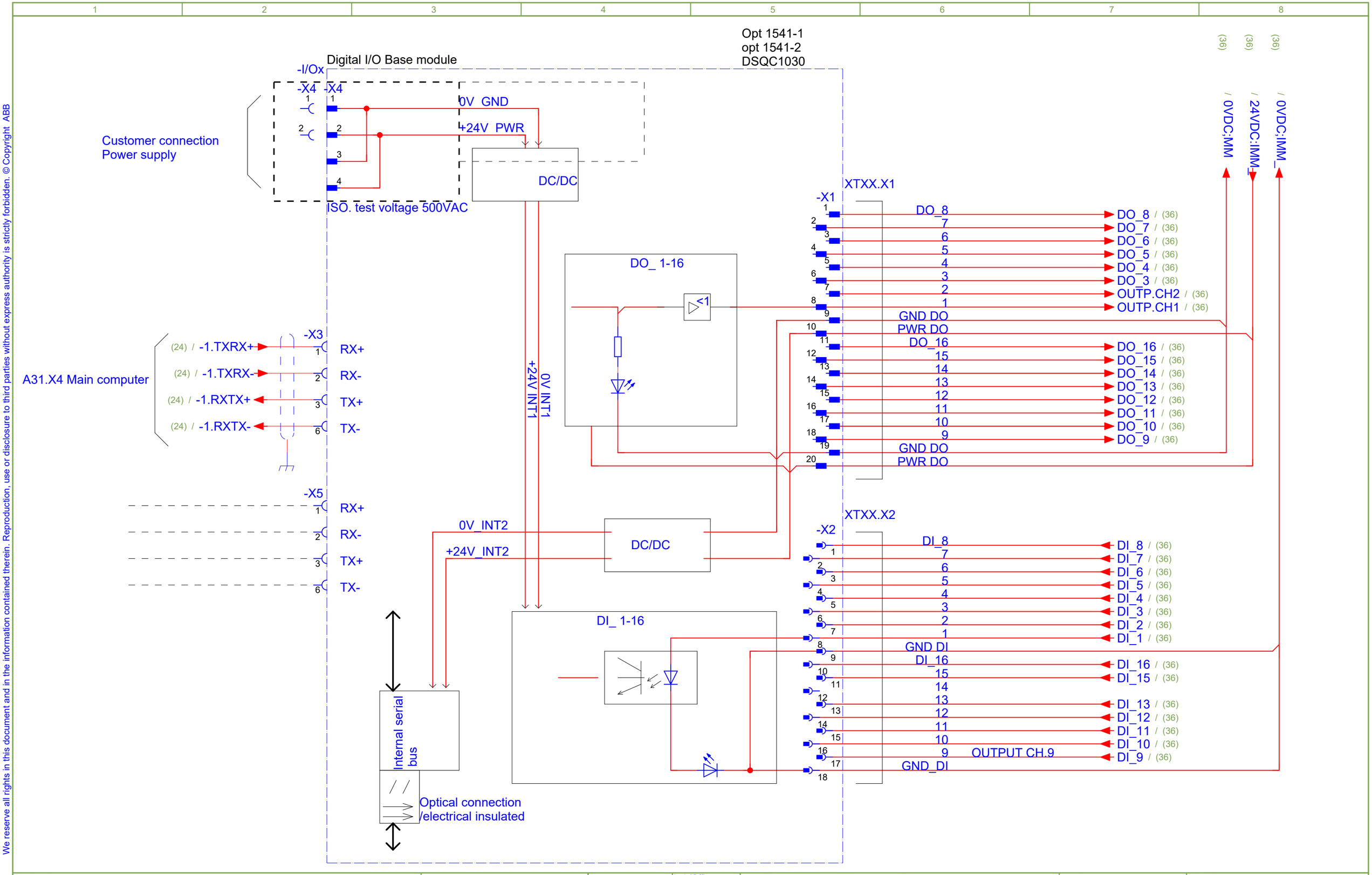

We reserve all rights in this document and in the information contained therein. Reproduction, use or disclosure to third parties without express authority is strictly forbidden. © Copyright ABB

Latest revision:	EUROMAP 67	ABB	Lab/Office: RA/RDP	IRC5 DESIGN 14 Euromap 67 Local I/O Digital Base 16in/16out	Status: Approved
					Plant: = Location: + Sublocation: +
					Document no. 3HAC024120-005
					Rev. Ind 02
					Page 37 Next 39 Total 35
Prepared by, date: A.Hägglund	Approved by, date: S.Hällgren 2024-03-25				

We reserve all rights in this document and in the information contained therein. Reproduction, use or disclosure to third parties without express authority is strictly forbidden. © Copyright ABB

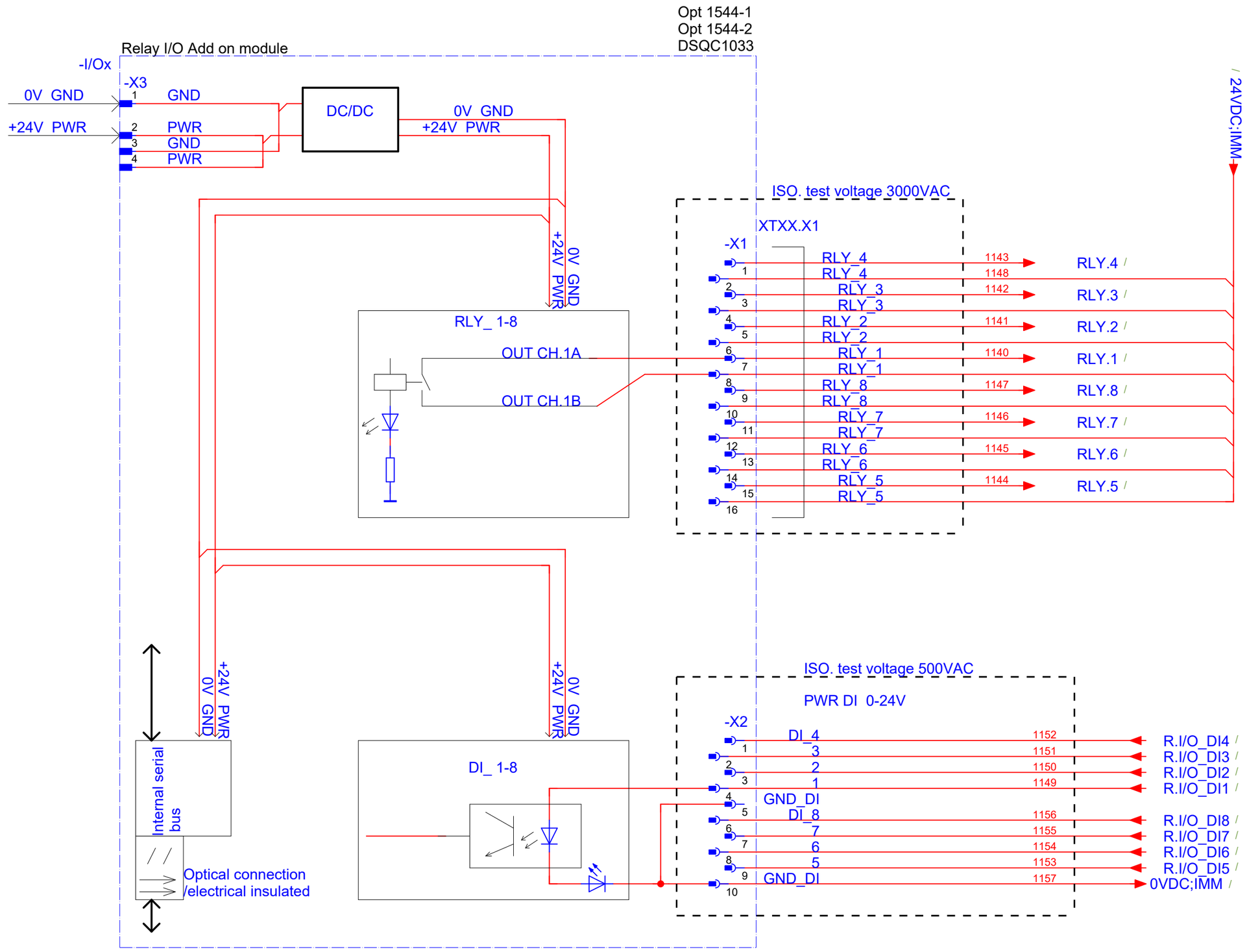

Latest revision:	EUROMAP 67	ABB	Lab/Office: RA/RDP	IRC5 DESIGN 14 Euromap 67 Local I/O Digital 8in/8out 8 Relay in/out	Status: Approved	Plant: = Location: + Sublocation: +
Prepared by, date: A.Hägglund	Approved by, date: S.Hällgren 2024-03-25				Document no. 3HAC024120-005	Rev. Ind 02

Page 39
Next 42
Total 35

We reserve all rights in this document and in the information contained therein. Reproduction, use or disclosure to third parties without express authority is strictly forbidden. © Copyright ABB

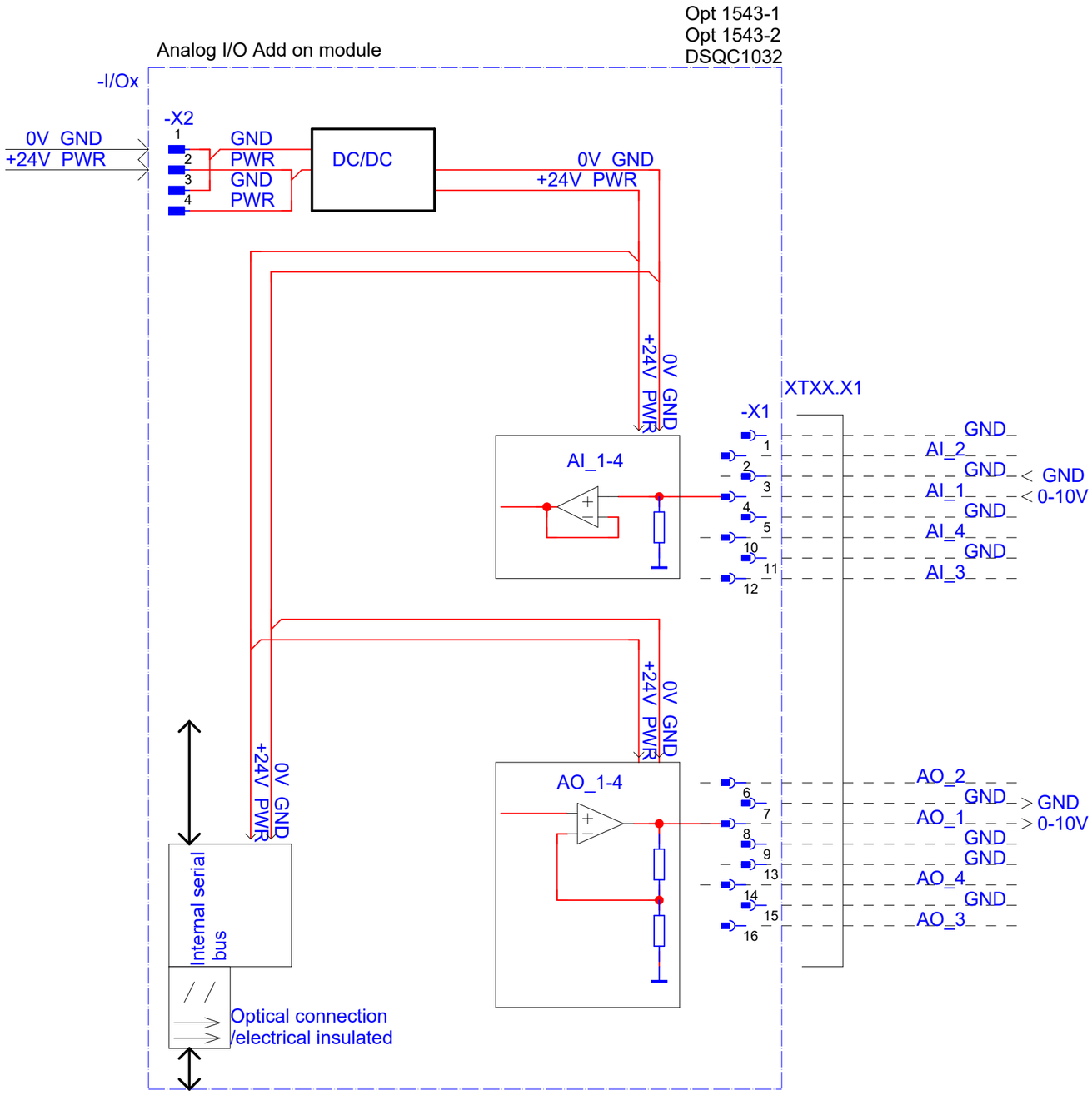

Latest revision:	EUROMAP 67	ABB	Lab/Office: RA/RDP	IRC5 DESIGN 14 Euromap 67 ANALOGUE I/O UNIT DSQC1032	Status: Approved	Plant: = Location: + Sublocation: +
Prepared by, date: A.Hägglund	Approved by, date: S.Hällgren 2024-03-25				Document no. 3HAC024120-005	Rev. Ind 02

We reserve all rights in this document and in the information contained therein. Reproduction, use or disclosure to third parties without express authority is strictly forbidden. © Copyright ABB

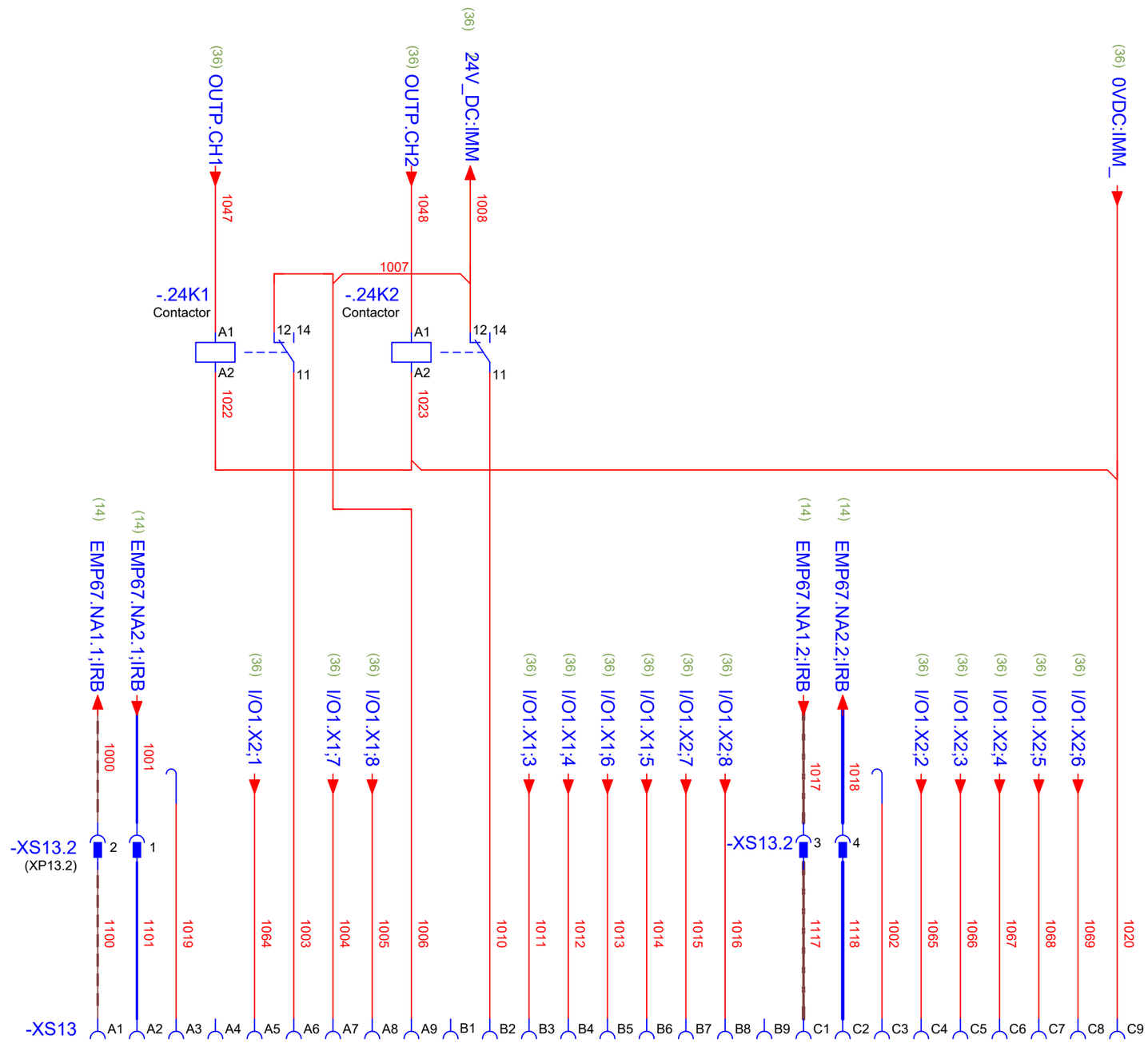

Note:
XS13: A3 and C3 can be connected by customer to Relay I/O DSQC1033.
I/O can be selected by option 1544-1.

Latest revision:	EUROMAP 67	ABB	Lab/Office: RA/RDP	IRC5 DESIGN 14 Euromap 67 XS13	Status: Approved	Plant: = Location: + Sublocation: +	
Prepared by, date: A.Hägglund	Approved by, date: S.Hällgren 2024-03-25				Document no. 3HAC024120-005	Rev. Ind 02	Page 47 Next 48 Total 35

We reserve all rights in this document and in the information contained therein. Reproduction, use or disclosure to third parties without express authority is strictly forbidden. © Copyright ABB

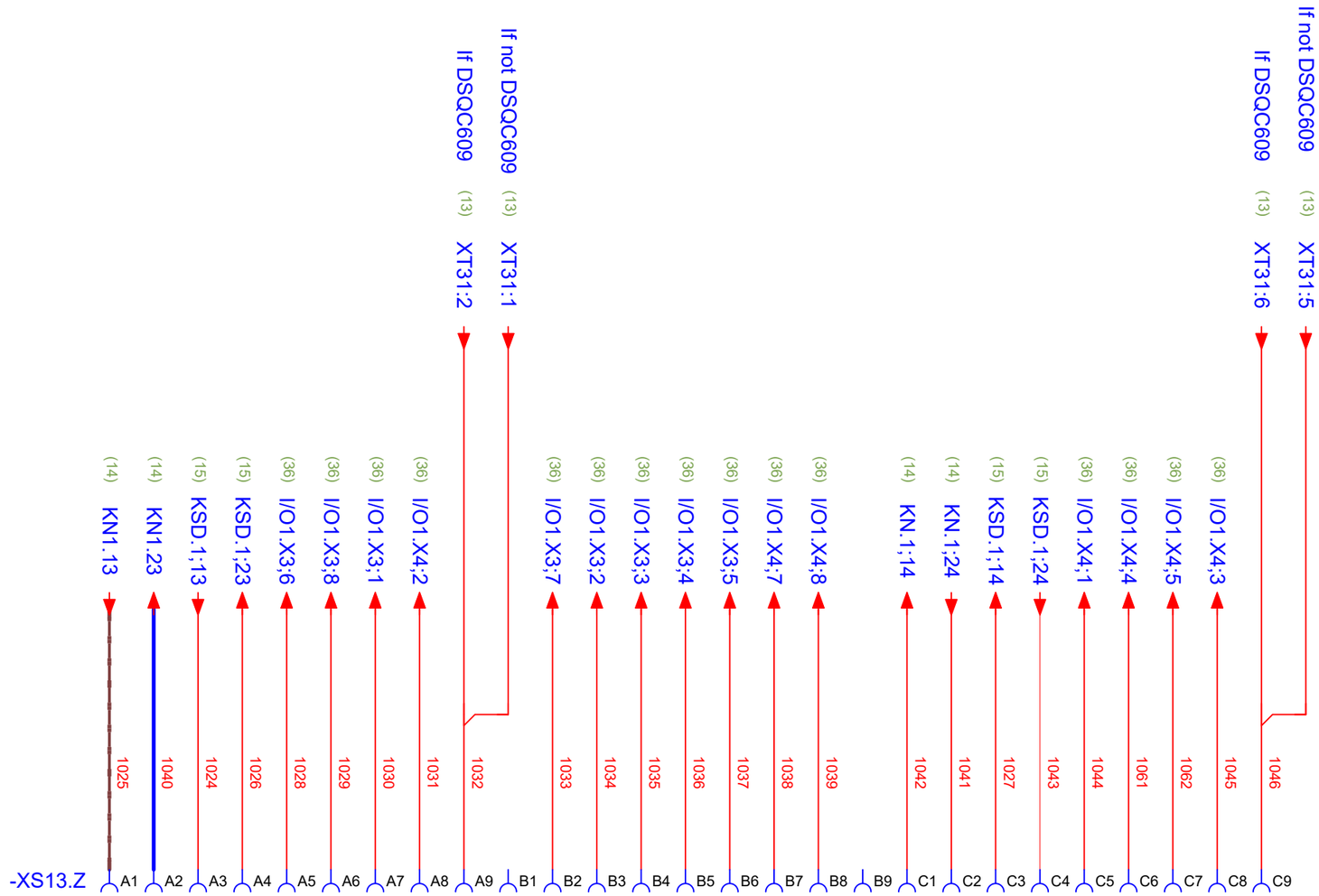

Latest revision:	EUROMAP 67	ABB	Lab/Office: RA/RDP	IRC5 DESIGN 14 Euromap 67 XS13Z	Status: Approved	Plant: = Location: + Sublocation: +
Prepared by, date: A.Hägglund	Approved by, date: S.Hällgren 2024-03-25				Document no. 3HAC024120-005	Rev. Ind 02
						Page 48 Next Total 35